JVC

SERVICE MANUAL

TV/DVD COMBO

AV-20FD24

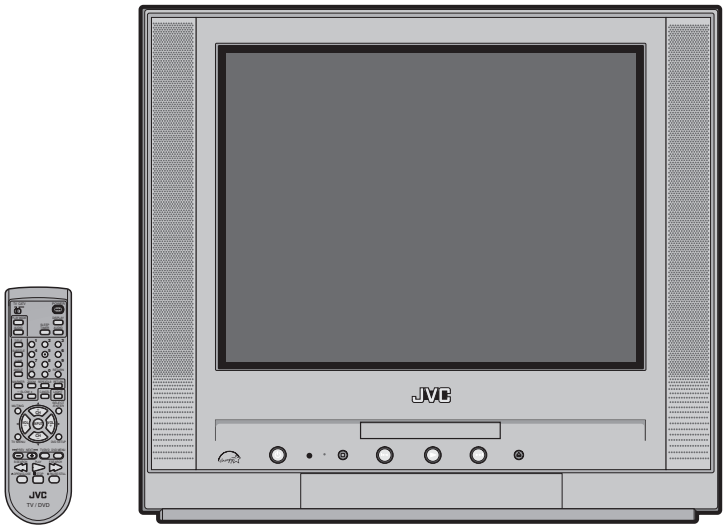

CONTENTS

- SPECIFICATIONS 2
- OPERATING INSTRUCTIONS (APPENDIX)
- SAFETY PRECAUTIONS 3
- SPECIFIC SERVICE INSTRUCTIONS 7
- SERVICE ADJUSTMENTS 19
- GUIDE FOR REPAIRING 25
- STANDARD CIRCUIT DIAGRAM 2-1
- PARTS LIST 37

COPYRIGHT © 2003 VICTOR COMPANY OF JAPAN, LTD.

No. 52133
2003/06

SPECIFICATIONS

TELEVISION

Picture Tube:	20” (measured diagonally)
Color System:	NTSC
TV RF System:	US System M
Tuner Type:	Quartz PLL Frequency Synthesized
Receiving Channels:	VHF 2-13
	UHF 14-69
	CATV 14-36 (A)-(W)
	37-59 (AA)-(WW)
	60-85 (AAA)-(ZZZ)
	86-94 (86)-(94)
	95-99 (A-5)-(A-1)
	100-125 (100)-(125)
	01 (5A)
Intermediate Frequency:	Picture (FP) : 45.75 MHz
	Sound (FS) : 41.25 MHz
	FP-FS : 4.50 MHz
Antenna Input:	VHF/UHF In 75 ohms coaxial, F-Type Connector
Speaker:	1.8” x 3.9”, 8 ohms x 2
Audio Output Power:	2.5 W + 2.5 W

DVD/CD PLAYER

Color System:	NTSC
Applicable Disc:	DVD (120 mm, 80 mm)
	CD-DA (120 mm, 80 mm)
	CD-R/RW (120 mm, 80 mm)
Pick up:	1-Lens, 2-Beams System
	CD : Wavelength : 775 - 815 nm
	Maximum output power : 0.5 mW
	DVD : Wavelength : 650 - 666 nm
	Maximum output power : 2.0 mW
Frequency Response:	DVD : 4 Hz – 22 kHz
	CD : 4 Hz – 20 kHz
Audio DAC:	192 kHz/24 bit

GENERAL

Power Source:	120 V AC, 60 Hz
Power Consumption:	115 Watts
Dimensions(W x H x D):	574 mm x 514.5 mm x 483 mm
Weight:	56.1 lbs/25.5 kg
Inputs/Outputs:	Video input: 1.0 Vp-p, 75 ohm (RCA pin jack)
	Audio input: -8 dBm, 50 kohm (RCA pin jack)
	Digital Audio output (DVD only): 0.5 Vp-p, 75 ohm (Coaxial)
Headphone Jack:	3.5 mm mini-jack
Storage Temperature	-20 °C ~ 60 °C
Operating Temperature	5 °C ~ 40 °C

Accessories:

Remote Control X 1
Batteries (UM-3) X 2

Design & specification are subject to change without notice.

SAFETY PRECAUTIONS

CAUTION

THIS DIGITAL VIDEO PLAYER EMPLOYS A LASER SYSTEM.

TO ENSURE PROPER USE OF THIS PRODUCT, PLEASE READ THIS SERVICE MANUAL CAREFULLY AND RETAIN FOR FUTURE REFERENCE. SHOULD THE UNIT REQUIRE MAINTENANCE, CONTACT AN AUTHORIZED SERVICE LOCATION-SEE SERVICE PROCEDURE.

USE OF CONTROLS, ADJUSTMENTS OR THE PERFORMANCE OF PROCEDURES OTHER THAN THOSE SPECIFIED HEREIN MAY RESULT IN HAZARDOUS RADIATION EXPOSURE.

TO PREVENT DIRECT EXPOSURE TO LASER BEAM, DO NOT TRY TO OPEN THE ENCLOSURE. VISIBLE LASER RADIATION MAY BE PRESENT WHEN THE ENCLOSURE IS OPENED. DO NOT STARE INTO BEAM.

Location of the required Marking
The rating sheet and the safety caution are on the rear of the unit.

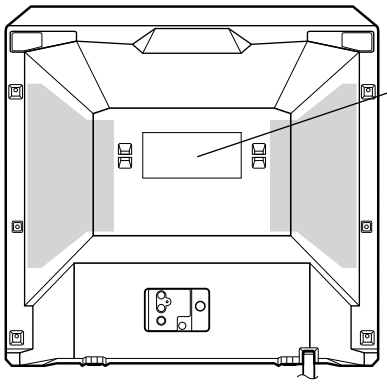

CERTIFICATION: COMPLIES WITH FDA RADIATION PERFORMANCE STANDARDS, 21 CFR SUBCHAPTER J.

IMPORTANT SERVICE SAFETY INFORMATION

Operating the receiver outside of its cabinet or with its back removed involves a shock hazard. Work on these models should only be performed by those who are thoroughly familiar with precautions necessary when working on high voltage equipment.

Exercise care when servicing this chassis with power applied. Many B plus and high voltage RF terminals are exposed which, if carelessly contacted, can cause serious shock or result in damage to the chassis.
Maintain interconnecting ground lead connections between chassis, escutcheon, picture tube dag and tuner cluster when operating the chassis.

These receivers have a "polarized" AC line cord. The AC plug is designed to fit into standard AC outlets in one direction only. The wide blade connects to the "ground side" and the narrow blade connects to the "hot side" of the AC line. This assures that the TV receiver is properly grounded to the house wiring. If an extension cord must be used, make sure it is of the "polarized" type.

Since the chassis of this receiver is connected to one side of the AC supply during operation, service should not be attempted by anyone not familiar with the precautions necessary when working on these types of equipment.

When it is necessary to make measurements or tests with AC power applied to the receiver chassis, an Isolation Transformer must be used as a safety precaution and to prevent possible damage to transistors. The Isolation Transformer should be connected between the TV line cord plug and the AC power outlet.

Certain HV failures can increase X-ray radiation.
Receivers should not be operated with HV levels exceeding the specified rating for their chassis type. The maximum operating HV specified for the chassis used in these receivers is 32kV±1.0kV at zero beam current with a line voltage of 120V AC. Higher voltage may also increase the possibility of failure in the HV supply.

It is important to maintain specified values of all components in the horizontal and high voltage circuits and anywhere else in the receiver that could cause a rise in high voltage, or operating supply voltages. No changes should be made to the original design of the receiver.

Components shown in the shaded areas on the schematic diagram and/or identified by ⚠ in the replacement parts list should be replaced only with exact factory recommended replacement parts. The use of unauthorized substitute parts may create shock, fire, X-ray radiation, or other hazards.

To determine the presence of high voltage, use an accurate high impedance HV meter connected between the second anode lead and the CRT dag grounding device. When servicing the High Voltage System, remove static charges from it by connecting a 10k ohm resistor in series with an insulated wire (such as a test probe) between the picture tube dag and 2nd anode lead (have AC line cord disconnected from AC supply).

The picture tube used in this receiver employs integral implosion protection. Replace with a tube of the same type number for continued safety. Do not lift picture tube by the neck. Handle the picture tube only when wearing shatterproof goggles and after discharging the high voltage completely. Keep others without shatterproof goggles away.

When removing springs or spring mounted parts from the tuner, tuner cluster or chassis, shatterproof goggles must be worn. Keep others without shatterproof goggles away.

Before returning the receiver to the user, perform the following safety checks:

1. Inspect all lead dress to make certain that leads are not pinched or that hardware is not lodged between the chassis and other metal parts in the receiver.
2. Replace all protective devices such as nonmetallic control knobs, insulating fishpapers, cabinet backs, adjustment and compartment covers or shields, isolation resistor-capacitor networks, mechanical insulators, etc.
3. To be sure that no shock hazard exists, a check for the presence of leakage current should be made at each exposed metal part having a return path to the chassis (antenna, cabinet metal, screw heads, knobs and/or shafts, escutcheon, etc.) in the following manner.

Plug the AC line cord directly into a 120V AC receptacle.
(Do not use an Isolation Transformer during these checks.) All checks must be repeated with the AC line cord plug connection reversed. (If necessary, a nonpolarized adapter plug must be used only for the purpose of completing these checks.)

If available, measure current using an accurate leakage current tester. Any reading of 0.35mA or more is excessive and indicates a potential shock hazard which must be corrected before returning the receiver to the owner.

If a reliable leakage current tester is not available, this alternate method of measurement should be used.
Using two clip leads, connect a 1500 ohm, 10 watt resistor paralleled by a 0.15μF capacitor in series with a known earth ground, such as a water pipe or conduit and the metal part to be checked. Use a VTVM or VOM with 1000 ohms per volt, or higher, sensitivity to measure this AC voltage drop across the resistor. Any reading of 0.35 volt RMS or more is excessive and indicates a potential shock hazard which must be corrected before returning the receiver to the owner.

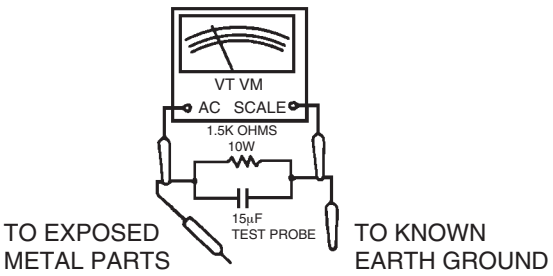

IMPORTANT SAFEGUARDS

1. **READ INSTRUCTIONS**
   All the safety and operating instructions should be read before the unit is operated.
2. **RETAIN INSTRUCTIONS**
   The safety and operating instructions should be retained for future reference.
3. **HEED WARNINGS**
   All warnings on the unit and in the operating instructions should be adhered to.
4. **FOLLOW INSTRUCTIONS**
   All operating and use instructions should be followed.
5. **CLEANING**
   Unplug this unit from the wall outlet before cleaning. Do not use liquid cleaners or aerosol cleaners. Use a damp cloth for cleaning.
6. **ATTACHMENTS**
   Do not use attachments not recommended by the unit's manufacturer as they may cause hazards.
7. **WATER AND MOISTURE**
   Do not use this unit near water. For example, near a bathtub, washbowl, kitchen sink, or laundry tub, in a wet basement, or near a swimming pool.

PORTABLE CART WARNING
(symbol provided by RETAC)

S3126A

8 **ACCESSORIES**
   Do not place this unit on an unstable cart, stand, tripod, bracket, or table. The unit may fall, causing serious injury, and serious damage to the unit. Use only with a cart, stand, tripod, bracket, or table recommended by the manufacturer.

8A. An appliance and cart combination should be moved with care. Quick stops, excessive force, and uneven surfaces may cause the appliance and cart combination to overturn.

9. **VENTILATION**
   Slots and openings in the cabinet and in the back or bottom are provided for ventilation, to ensure reliable operation of the unit, and to protect it from overheating. These openings must not be blocked or covered. The openings should never be blocked by placing the unit on a bed, sofa, rug, or other similar surface. This unit should never be placed near or over a radiator or heat source. This unit should not be placed in a built-in installation such as a bookcase or rack unless proper ventilation is provided or the manufacturer's instructions have been adhered to.
10. **POWER SOURCES**
    This unit should be operated only from the type of power source indicated on the rating plate. If you are not sure of the type of power supply to your home, consult your appliance dealer or local power company. For units intended to operate from battery power, or other sources, refer to the operating instructions.
11. **GROUNDING OR POLARIZATION**
    This unit is equipped with a polarized alternating-current line plug (a plug having one blade wider than the other). This plug will fit into the power outlet only one way. This is a safety feature. If you are unable to insert the plug fully into the outlet, try reversing the plug. If the plug should still fail to fit, contact your electrician to replace your obsolete outlet. Do not defeat the safety purpose of the polarized plug. If your unit is equipped with a 3-wire grounding-type plug, a plug having a third (grounding) pin, this plug will only fit into a grounding-type power outlet. This too, is a safety feature. If you are unable to insert the plug into the outlet, contact your electrician to replace your obsolete outlet. Do not defeat the safety purpose of the grounding-type plug.
12. **POWER-CORD PROTECTION**
    Power-supply cords should be routed so that they are not likely to be walked on or pinched by items placed upon or against them, paying particular attention to cords at plugs, convenience receptacles, and the point where they exit from the appliance.
13. **LIGHTNING**
    To protect your unit from a lightning storm, or when it is left unattended and unused for long periods of time, unplug it from the wall outlet and disconnect the antenna or cable system. This will prevent damage to the unit due to lightning and power line surges.
14. **POWER LINES**
    An outside antenna system should not be located in the vicinity of overhead power lines or other electric light or power circuits, or where it can fall into such power lines or circuits. When installing an outside antenna system, extreme care should be taken to keep from touching such power lines or circuits, as contact with them might be fatal.
15. **OVERLOADING**
    Do not overload wall outlets and extension cords, as this can result in a risk of fire or electric shock.
16. **OBJECT AND LIQUID ENTRY**
    Do not push objects through any openings in this unit, as they may touch dangerous voltage points or short out parts that could result in fire or electric shock. Never spill or spray any type of liquid into the unit.
17. **OUTDOOR ANTENNA GROUNDING**
    If an outside antenna or cable system is connected to the unit, be sure the antenna or cable system is grounded so as to provide some protection against voltage surges and built-up static charges. Section 810 of the National Electrical Code, ANSI/NFPA 70, provides information with respect to proper grounding of the mast and supporting structure, grounding of the lead-in wire to an antenna discharge unit, size of grounding conductors, location of antenna discharge unit, connection to grounding electrodes, and requirements for the grounding electrode.
18. **SERVICING**
    Do not attempt to service this unit yourself as opening or removing covers may expose you to dangerous voltage or other hazards.
    Refer all servicing to qualified service personnel.

19. DAMAGE REQUIRING SERVICE

Unplug this unit from the wall outlet and refer servicing to qualified service personnel under the following conditions:

a. When the power-supply cord or plug is damaged.
b. If liquid has been spilled, or objects have fallen into the unit.
c. If the unit has been exposed to rain or water.
d. If the unit does not operate normally by following the operating instructions. Adjust only those controls that are covered by the operating instructions, as an improper adjustment of other controls may result in damage and will often require extensive work by a qualified technician to restore the unit to its normal operation.
e. If the unit has been dropped or the cabinet has been damaged.
f. When the unit exhibits a distinct change in performance, this indicates a need for service.

20. REPLACEMENT PARTS

When replacement parts are required, be sure the service technician uses replacement parts specified by the manufacturer or those that have the same characteristics as the original parts.
Unauthorized substitutions may result in fire, electric shock or other hazards.

21. SAFETY CHECK

Upon completion of any service or repairs to this unit, ask the service technician to perform safety checks to determine that the unit is in proper operating condition.

22. WALL OR CEILING MOUNTING

The product should be mounted to a wall or ceiling only as recommended by the manufacturer.

23. HEAT

The product should be situated away from heat sources such as radiators, heat registers, stoves, or other products (including amplifiers) that produce heat.

24. DISC TRAY

Keep your fingers well clear of the disc tray as it is closing. It may cause serious personal injury.

25. CONNECTING

When you connect the product to other equipment, turn off the power and unplug all of the equipment from the wall outlet. Failure to do so may cause an electric shock and serious personal injury. Read the owner's manual of the other equipment carefully and follow the instructions when making any connections.

26. SOUND VOLUME

Reduce the volume to the minimum level before you turn on the product. Otherwise, sudden high volume sound may cause hearing or speaker damage.

27. SOUND DISTORTION

Do not allow the product output distorted sound for a longtime. It may cause speaker overheating and fire.

28. HEADPHONES

When you use the headphones, keep the volume at a moderate level. If you use the headphones continuously with high volume sound, it may cause hearing damage.

29. LEASER BEAM

Do not look into the opening of the disc tray or ventilation opening of the product to see the source of the laser beam. It may cause sight damage.

30. DISC

Do not use a cracked, deformed, or repaired disc. These discs are easily broken and may cause serious personal injury and product malfunction.

31. NOTE TO CATV SYSTEM INSTALLER

This reminder is provided to call the CATV system installer’s attention to Article 820-40 of the NEC that provides guidelines for proper grounding and, in particular, specifies that the cable ground shall be connected to the grounding system of the building, as close to the point of cable entry as practical.

EXAMPLE OF ANTENNA GROUNDING AS PER THE NATIONAL ELECTRICAL CODE

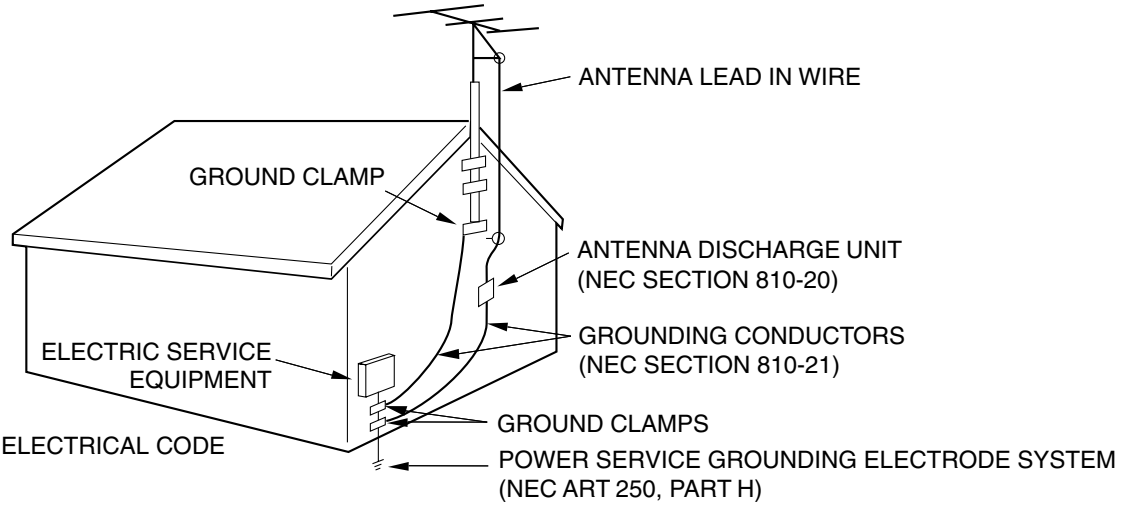

NEC-NATIONAL ELECTRICAL CODE

S2898A

SPECIFIC SERVICE INSTRUCTIONS

DISASSEMBLY INSTRUCTIONS

1. REMOVAL OF MECHANICAL PARTS AND P.C. BOARDS

1-1: BACK CABINET (Refer to Fig. 1-1)

1. Remove the 7 screws ①.
2. Remove the screw ② which are used for holding the Back Cabinet.
3. Remove the AC cord from the AC cord hook ③.
4. Remove the Back Cabinet in the direction of arrow.

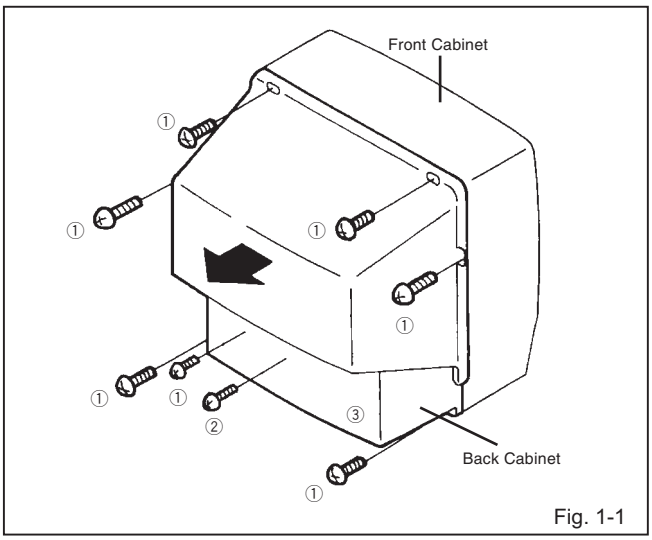

Fig. 1-1

1-2: CRT PCB (Refer to Fig. 1-2)

CAUTION: BEFORE REMOVING THE ANODE CAP, DISCHARGE ELECTRICITY BECAUSE IT CONTAINS HIGH VOLTAGE.
BEFORE ATTEMPTING TO REMOVE OR REPAIR ANY PCB, UNPLUG THE POWER CORD FROM THE AC SOURCE.

1. Remove the Anode Cap.
   (Refer to REMOVAL OF ANODE CAP)
2. Disconnect the following connector:
   (CP801).
3. Remove the CRT PCB in the direction of arrow.

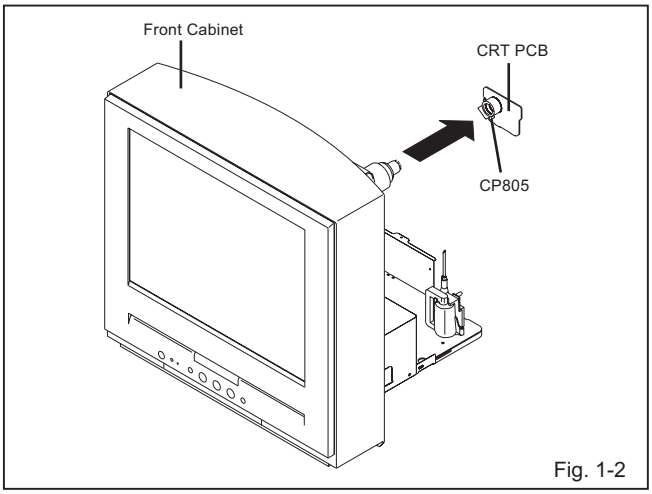

Fig. 1-2

1-3: AV PCB/DVD BLOCK (Refer to Fig. 1-3)

1. Remove the 2 screws ①.
2. Disconnect the following connectors:
   (CP104, CP301, CP302, CP401 and CP3800).
3. Remove the AV PCB/DVD Block in the direction of arrow.

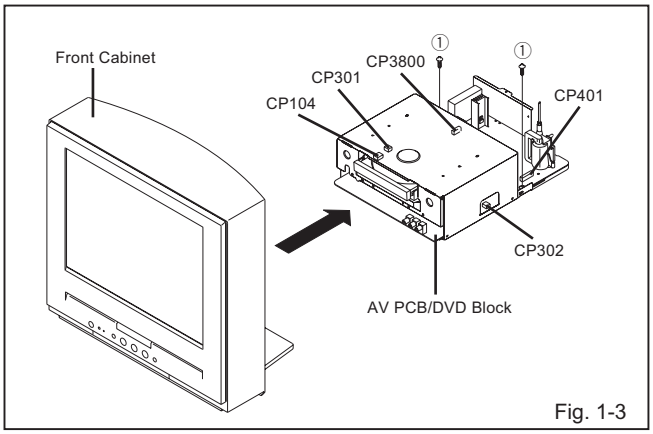

Fig. 1-3

1-4: DVD BLOCK (Refer to Fig. 1-4)

1. Remove the 11 screws ①.
2. Remove the Top Shield in the direction of arrow (A).
3. Disconnect the following connectors:
   (CP8001 and CP8002).
4. Remove the 4 screws ②.
5. Remove the DVD Block in the direction of arrow (B).
6. Remove the 2 screws ③.
7. Remove the Jack Shield.
8. Remove the AV PCB in the direction of arrow (C).

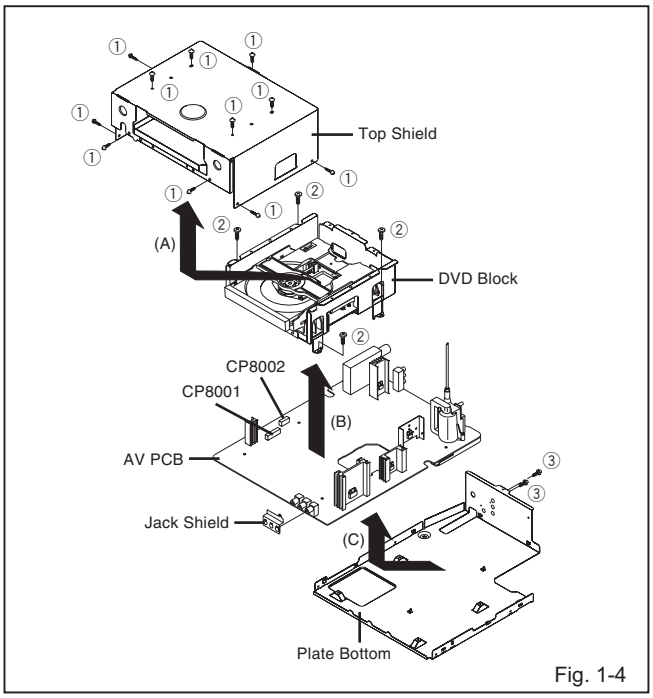

Fig. 1-4

1-5: DVD PCB/DVD DECK (Refer to Fig. 1-5)

1. Make the short circuit on the position as shown **Fig. 1-5** using a soldering. If you remove the DVD Deck with no soldering, the Laser may be damaged.
2. Unlock the 2 supports ①.
3. Remove the Front Tray Plate in the direction of arrow (A).
4. Disconnect the following connectors:
   (CP2001, CP2301 and CP2302).
5. Remove the 4 screws ②.
6. Remove the DVD Deck in the direction of arrow (B).
7. Remove the 4 screws ③.
8. Remove the DVD PCB in the direction of arrow (C).

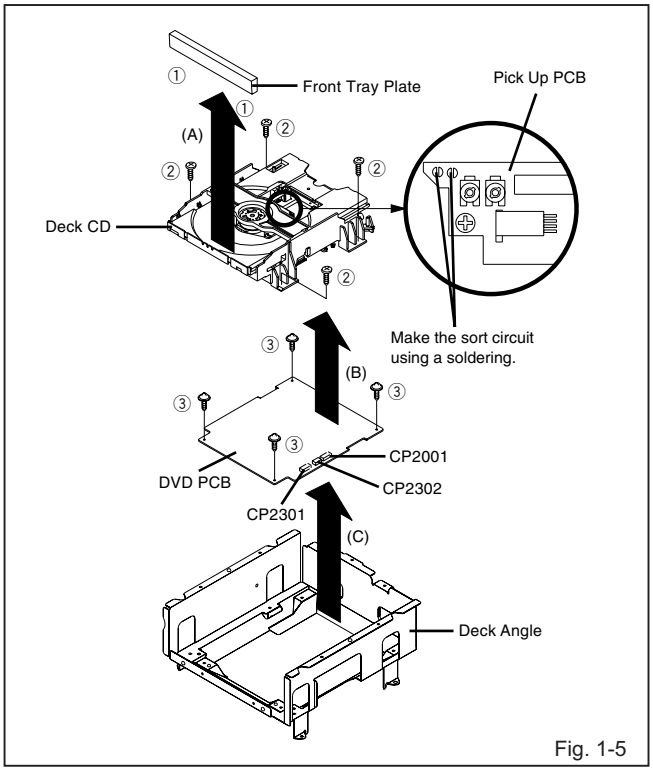

Fig. 1-5

NOTE

When the installation of the DVD Deck, remove all the soldering on the short circuit position after the connection of Pick Up PCB and DVD PCB connector.

2. REMOVAL OF DVD DECK PARTS

NOTE

1. Do not disassemble the DVD DECK PARTS except listedparts here. Minute adjustments are needed if the disassemble is done. If the repair is needed except listed parts, replace the DVD MECHA ASS'Y.

2-1: TRAY (Refer to Fig. 2-1-A)

1. Set the Tray opened. **(Refer to the DISC REMOVAL METHOD AT NO POWER SUPPLY)**
2. Unlock the support ① and remove the Tray.

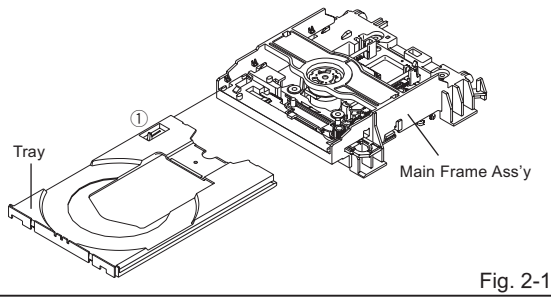

Fig. 2-1-A

NOTE

1. In case of the Tray installation, install them as the circled section of Fig. 2-1-B so that the each markers are met.

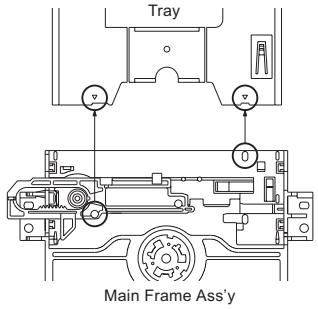

Fig. 2-1-B

2-2: MAIN CHASSIS ASS'Y (Refer to Fig. 2-2-A)

1. Remove the Main Chassis Ass'y from the Insulator (R).
2. Unlock the support ①.
3. Remove the Main Chassis Ass'y.

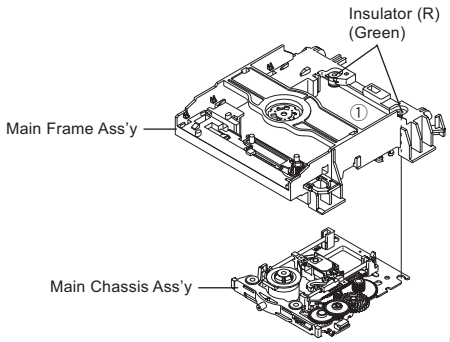

Fig. 2-2-A

NOTE

1. In case of the Main Chassis Ass'y, install it from (1) to (6) in order. **(Refer to Fig. 3-2-B)**

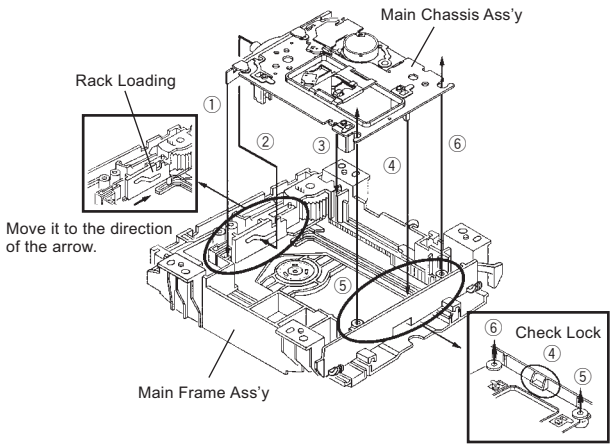

Fig. 2-2-B

2-3: RACK LOADING/MAIN GEAR/ RACK LOADING SPRING (Refer to Fig. 2-3)

1. Remove the Rack L Spring.
2. Press down the catcher ① and slide the Rack Loading.
3. Remove the Rack Loading, Rack Loading Spring and Main Gear.

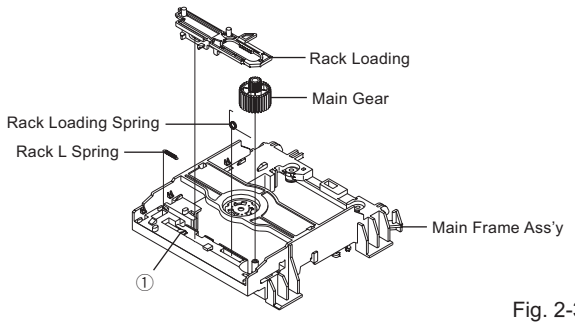

Fig. 2-3

2-4: CLAMPER ASS'Y/INSULATOR(R)/LEVER SWITCH (Refer to Fig. 2-4-A)

1. Remove the screw ①.
2. Remove the Lever Switch.
3. Remove the 2 Insulator (R).
4. Press the Clamper and rotate the Clamper Plate clockwise, then unlock the 3 supports ②.
5. Remove the Clamper Plate, Clamper Magnet and Clamper.

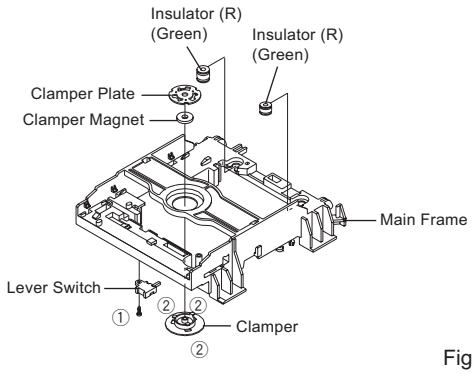

Fig. 2-4-A

NOTE

1. When installing the Clamper Magnet, install it with the green face up.
2. When installing the wire of the Lever Switch, install it correctly as Fig. 2-4-B.
3. When installing the Lever Switch, install it correctly as Fig. 2-4-C.
4. In case of the Lever Switch installation, hook the wire on the Main Frame as shown Fig. 2-4-D.

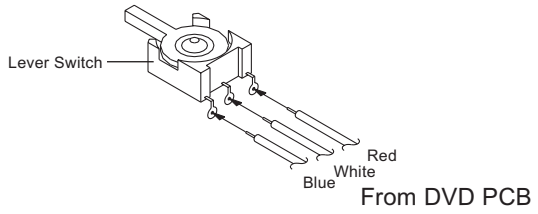

Fig. 2-4-B

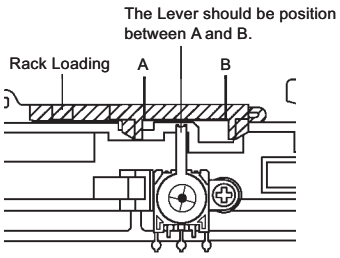

Fig. 2-4-C

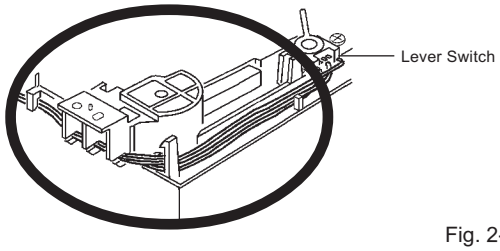

Fig. 2-4-D

2-5: TRAVERSE HOLDER/INSULATOR (F) (Refer to Fig. 2-5-A)

1. Remove the Traverse Holder.
2. Remove the 2 Insulator (F).

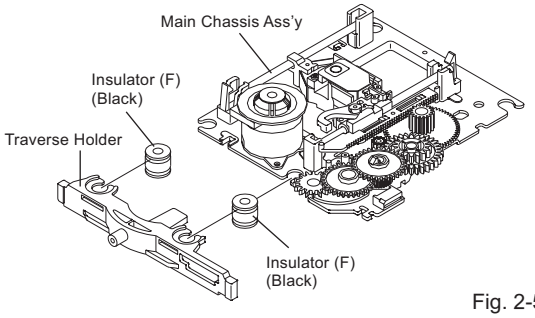

Fig. 2-5-A

NOTE

1. After the installing of the Traverse Holder, check if the wire is like Fig. 2-5-B.

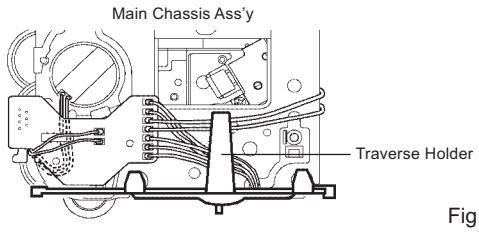

Fig. 2-5-B

2-6: SWITCH PCB ASS'Y (Refer to Fig. 2-6-A)

1. Remove the screw ①.
2. Remove the Switch PCB Ass'y.

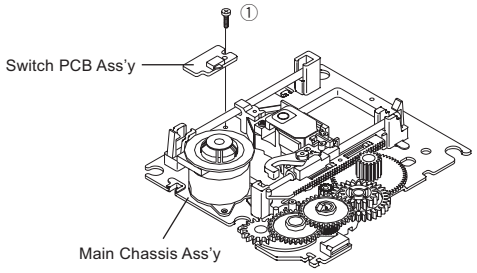

• Screw Torque: 4 ± 0.5kgf•cm

Fig. 2-6-A

NOTE

1. When installing the wire of the Switch PCB, install it correctly as Fig. 2-6-B.

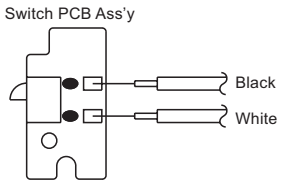

Fig. 2-6-B

2-7: RACK FEED ASS'Y (Refer to Fig. 2-7-A)

1. Remove the screw ①.
2. Remove the Rack Feed 1/2 Spring, Rack Feed 1/2 and Rack Feed Lever.

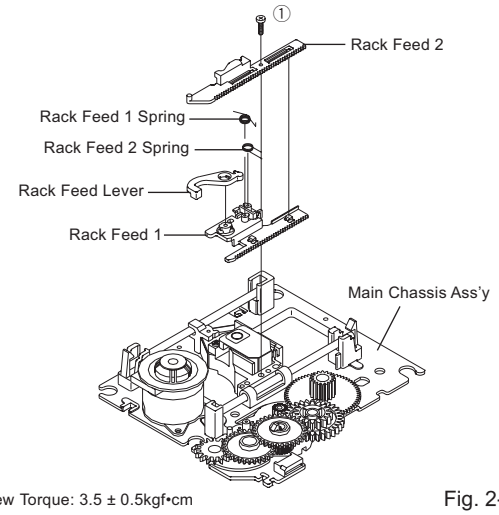

• Screw Torque: 3.5 ± 0.5kgf•cm

Fig. 2-7-A

NOTE

1. After the assembly of the Rack Feed, check if the Rack Feed 1/2 is moving smoothly. **(Refer to Fig. 2-7-B)**
2. In case of the Rack Feed AssÅfy installation, install correctly as Fig. 2-7-C.

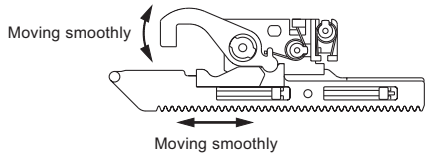

Fig. 2-7-B

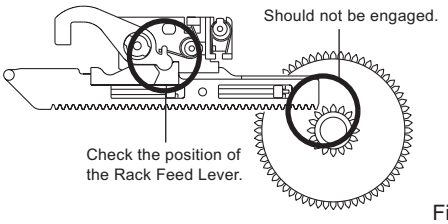

Fig. 2-7-C

2-8: RELAY PCB ASS'Y (Refer to Fig. 2-8-A)

1. Remove the screw ①.
2. Remove the Relay PCB Ass'y.

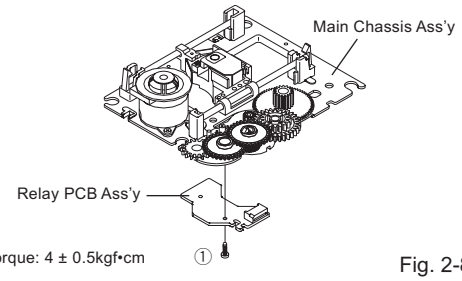

Fig. 2-8-A

NOTE

1. When installing the wire of the Relay PCB, install it correctly as Fig. 2-8-B.

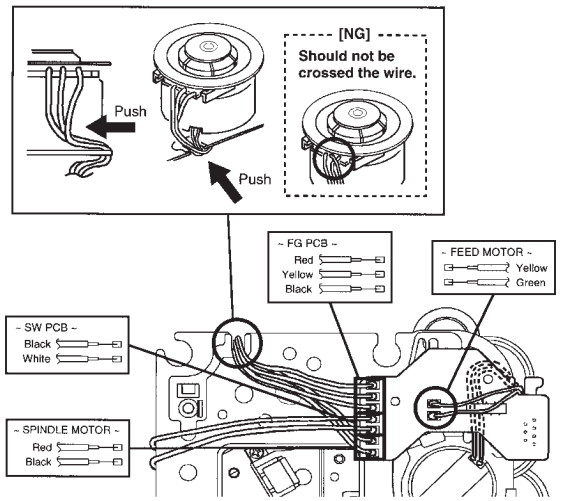

Fig. 2-8-B

2-9: GEAR (Refer to Fig. 2-9-A)

1. Unlock the support ①.
2. Remove the Middle Gear 1/2/3, Idler Gear and Feed Gear.

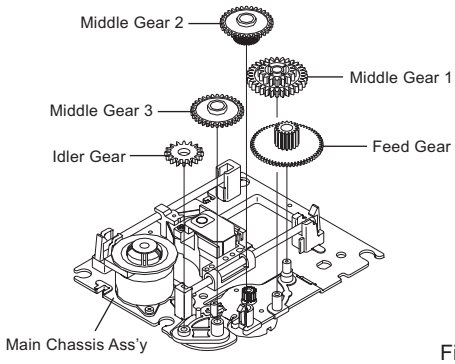

Fig. 2-9-A

NOTE

1. In case of the Idler Gear installation, install correctly as Fig. 2-9-B.
2. When installing the Middle Gear 2, check if the Middle Gear 2 is locked correctly as Fig. 2-9-C.

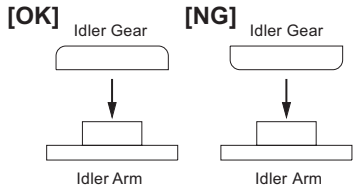

Fig. 2-9-B

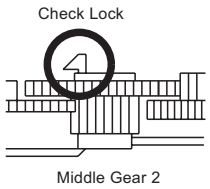

Fig. 2-9-C

2-10: IDLER ARM (Refer to Fig. 2-10-A)

1. Remove the Idler Arm Spring.
2. Remove the Chassis Spring.
3. Remove the Idler Arm.

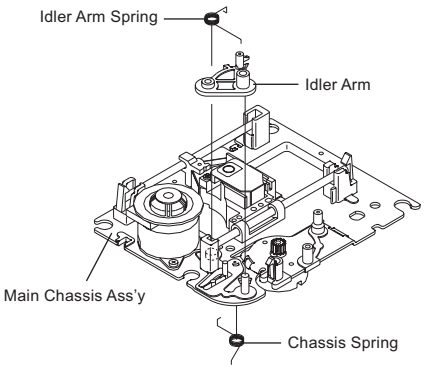

Fig. 2-10-A

NOTE

1. In case of the Idler Arm installation, install as the circled section of Fig. 2-10-B.
2. In case of the Idler Arm Spring installation, install as the circled section of Fig. 2-10-C.
3. In case of the Chassis Spring installation, install as the circled section of Fig. 2-10-D.

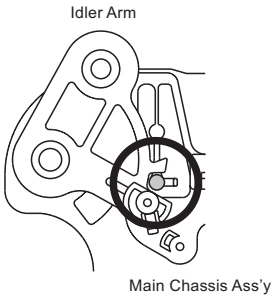

Fig. 2-10-B

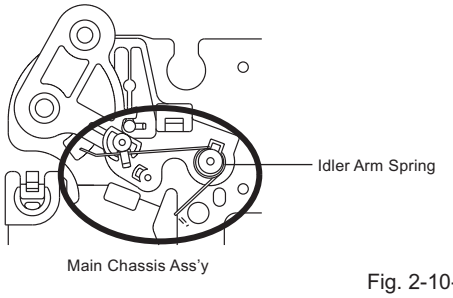

Fig. 2-10-C

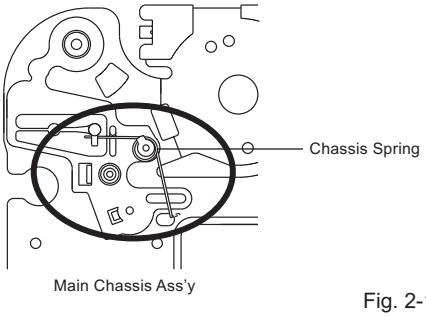

Fig. 2-10-D

2-11: FEED MOTOR (Refer to Fig. 2-11-A)

1. Remove the 2 screws ①.
2. Remove the Feed Motor.
3. Remove the Motor Gear.

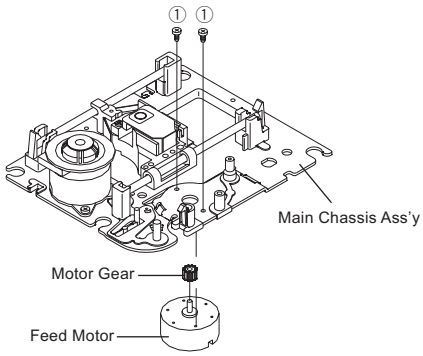

• Screw Torque: 1 ± 0.5kgf•cm

Fig. 2-11-A

NOTE

1. In case of the Motor Gear installation, check if the valueof the Fig. 2-11-B is correct.
2. When installing the Feed Motor, check if the cable is positioned as Fig. 2-11-C.

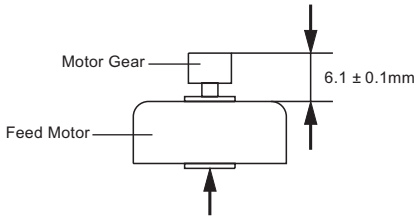

Fig. 2-11-B

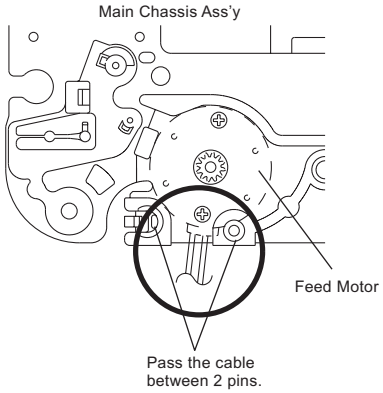

Fig. 2-11-C

3. REMOVAL OF ANODE CAP

Read the following **NOTED** items before starting work.

- After turning the power off there might still be a potential voltage that is very dangerous. When removing the Anode Cap, make sure to discharge the Anode Cap's potential voltage.
- Do not use pliers to loosen or tighten the Anode Cap terminal, this may cause the spring to be damaged.

REMOVAL

1. Follow the steps as follows to discharge the Anode Cap. **(Refer to Fig. 3-1.)**
   Connect one end of an Alligator Clip to the metal part of a flat-blade screwdriver and the other end to ground.
   While holding the plastic part of the insulated Screwdriver, touch the support of the Anode with the tip of the Screwdriver.
   A cracking noise will be heard as the voltage is discharged.

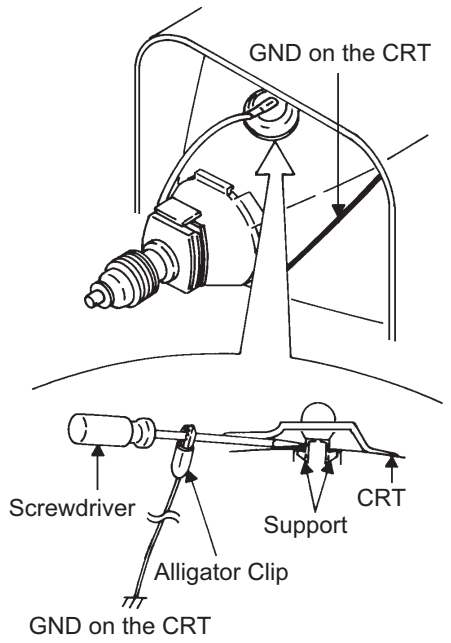

Fig. 3-1

2. Flip up the sides of the Rubber Cap in the direction of the arrow and remove one side of the support. **(Refer to Fig. 3-2.)**

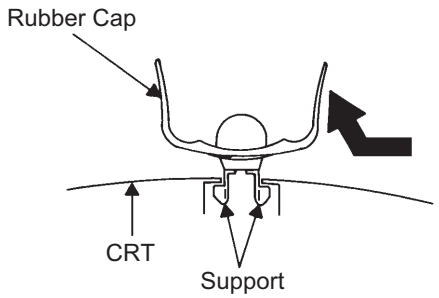

Fig. 3-2

3. After one side is removed, pull in the opposite direction to remove the other.

NOTE

Take care not to damage the Rubber Cap.

INSTALLATION

1. Clean the spot where the cap was located with a small amount of alcohol. **(Refer to Fig. 3-3.)**

NOTE

Confirm that there is no dirt, dust, etc. at the spot where the cap was located.

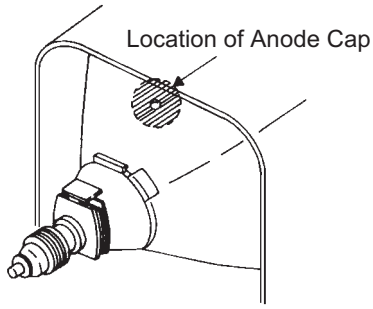

Fig. 3-3

2. Arrange the wire of the Anode Cap and make sure the wire is not twisted.
3. Turn over the Rubber Cap. **(Refer to Fig. 3-4.)**

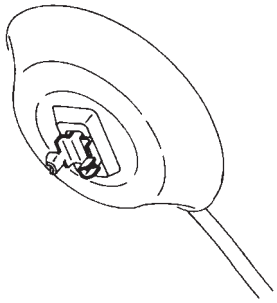
Fig. 3-4

4. Insert one end of the Anode Support into the anode button, then the other as shown in **Fig. 3-5**.

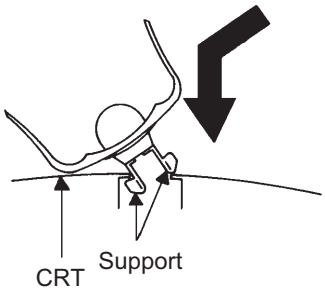

Fig. 3-5

5. Confirm that the Support is securely connected.
6. Put on the Rubber Cap without moving any parts.

4. REMOVAL AND INSTALLATION OF FLAT PACKAGE IC

REMOVAL

1. Put the Masking Tape (cotton tape) around the Flat Package IC to protect other parts from any damage.
   (Refer to Fig. 4-1.)

   NOTE

   Masking is carried out on all the parts located within 10 mm distance from IC leads.

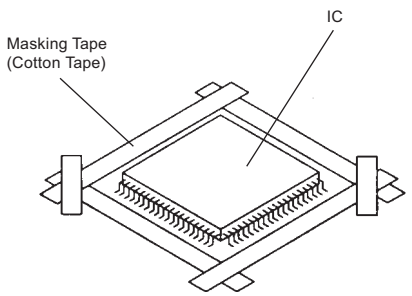

Fig. 4-1

2. Heat the IC leads using a blower type IC desoldering machine.
   (Refer to Fig. 4-2.)

   NOTE

   Do not add the rotating and the back and forth directions force on the IC, until IC can move back and fortheasily after desoldering the IC leads completely.

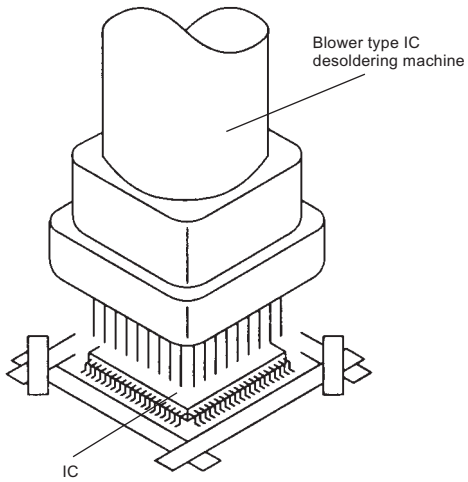

Fig. 4-2

3. When IC starts moving back and forth easily after desoldering completely, pickup the corner of the IC usinga tweezers and remove the IC by moving with the IC desoldering machine.
   (Refer to Fig. 4-3.)

   NOTE

   Some ICs on the PCB are affixed with glue, so be careful not to break or damage the foil of each IC leads or solder lands under the IC when removing it.

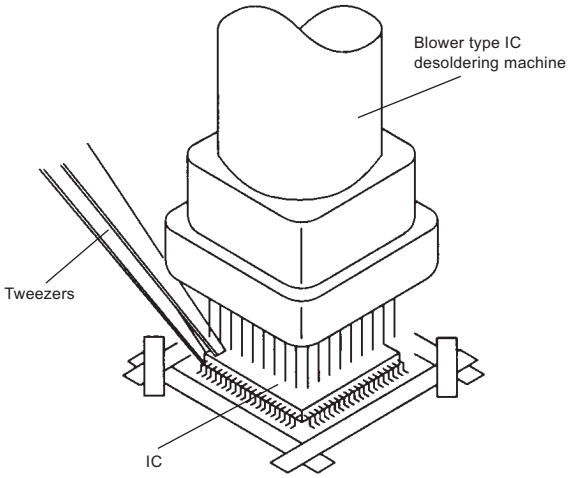

Fig. 4-3

4. Peel off the Masking Tape.
5. Absorb the solder left on the pattern using the Braided Shield Wire. **(Refer to Fig. 4-4.)**

   NOTE

   Do not move the Braided Shield Wire in the vertical direction towards the IC pattern.

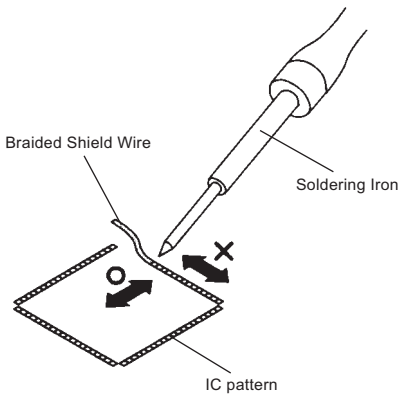

Fig. 4-4

INSTALLATION

1. Take care of the polarity of new IC and then install the new IC fitting on the printed circuit pattern. Then solder each lead on the diagonal positions of IC temporarily.
   (Refer to Fig. 4-5.)

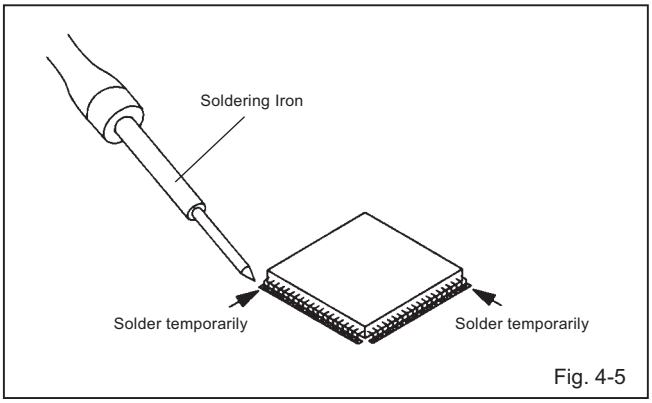

Fig. 4-5

2. Supply the solder from the upper position of IC leads sliding to the lower position of the IC leads.
   (Refer to Fig. 4-6.)

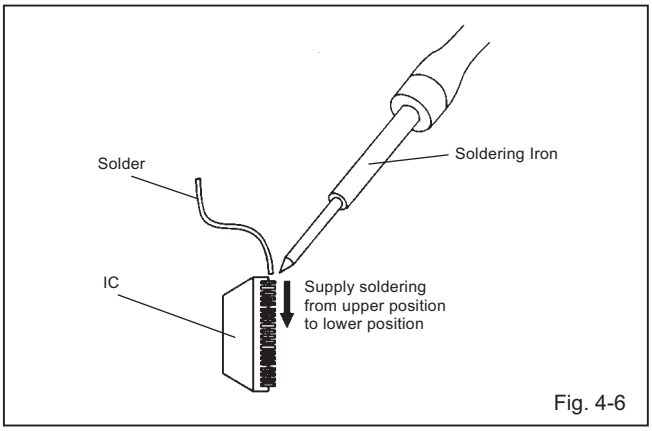

Fig. 4-6

3. Absorb the solder left on the lead using the Braided Shield Wire.
   (Refer to Fig. 4-7.)

   NOTE

   Do not absorb the solder to excess.

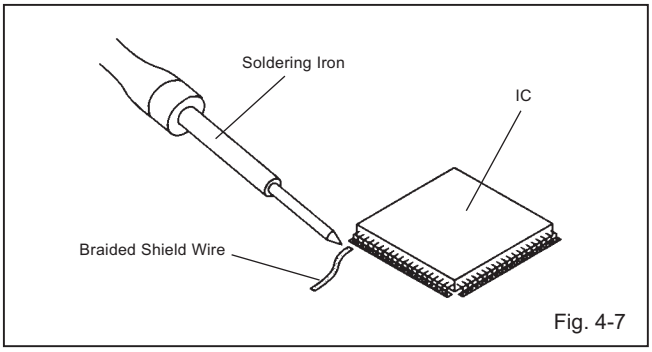

Fig. 4-7

4. When bridge-soldering between terminals and/or the soldering amount are not enough, resolder using a Thintip Soldering Iron.
   (Refer to Fig. 4-8.)

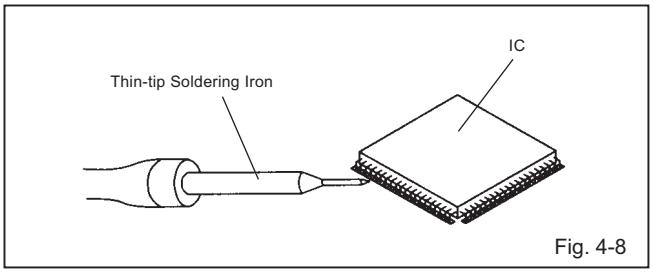

Fig. 4-8

5. Finally, confirm the soldering status on four sides of the IC using a magnifying glass.
   Confirm that no abnormality is found on the soldering position and installation position of the parts around the IC. If some abnormality is found, correct by resoldering.

   NOTE

   When the IC leads are bent during soldering and/or repairing, do not repair the bending of leads. If thebending of leads are repaired, the pattern may be damaged. So, be always sure to replace the IC in this case.

SERVICE MODE LIST

This unit provided with the following SERVICE MODES so you can repair, examine and adjust easily.

To enter to the SERVICE MODE function, press and hold both buttons simultaneously on the main unit and on the remote control for more than a standard time (second).

Set Key	Remocon Key	Standard Time (seconds)	Operations
VOL. (-) MIN	0	1	Releasing of V-CHIP PASSWORD.
VOL. (-) MIN	1	1	Initialization of the factory on TV. NOTE: Do not use this for the normal servicing. If you set a factory initialization, the memories are reset such as the channel setting, and the POWER ON total hours.
VOL. (-) MIN	4	1	Initialization of the factory on DVD. NOTE: Do not use this for the normal servicing. The function will only work without the setting of DVD disc at DVD mode. While pressing the Remocon Key for more than the Standard Time, press the Set Key simultaneously.
VOL. (-) MIN	5	1	DVD Write mode. Refer to the “RE-WRITE FOR DVD FIRMWARE”. NOTE: The function will only work at the DVD stop mode. Do not use this for the normal servicing.
VOL. (-) MIN	6	1	POWER ON total hours is displayed on the screen. Refer to the "PREVENTIVE CHECKS AND SERVICE INTERVALS" (CONFIRMATION OF HOURS USED). Can be checked of the INITIAL DATA of MEMORY IC. Refer to the "WHEN REPLACING EEPROM (MEMORY) IC".
VOL. (-) MIN	8	1	Writing of EEPROM initial data. NOTE: Do not use this for the normal servicing.
VOL. (-) MIN	9	1	Display of the Adjustment MENU on the screen. Refer to the "ELECTRICAL ADJUSTMENT" (On-Screen Display Adjustment).
STOP	1	3	Check for the firmware version. Refer to the “RE-WRITE FOR DVD FIRMWARE”. NOTE: The function will only work at the DVD stop mode. Do not use this for the normal servicing.
STOP	7	3	Releasing of PARENTAL LOCK. Refer to the “PARENTAL CONTROL - RATING LEVEL”. NOTE: The function will only work without the setting of DVD disc at DVD mode.

PARENTAL CONTROL - RATING LEVEL

4 DIGIT PASSWORD CANCELLATION

If the stored 4 digit password in the Rating Level menu needs to be cancelled, please follow the steps below.

1. Turn Unit ON and set the DVD mode.
2. Check that the “No disk” is displayed on the screen.
3. Press and hold the ‘STOP’ button on the front panel.
4. Simultaneously press and hold the ‘7’ key on the remote control unit.
5. Hold both keys for more than 3 second.
6. The On Screen Display message ‘PASSWORD CLEAR’ will appear.
7. The 4 digit password has now been cleared.

CONFIRMATION OF HOURS USED

POWER ON total hours can be checked on the screen. Total hours are displayed in 16 system of notation.

NOTE: If you set a factory initialization, the total hours is reset to "0".

1. Set the VOLUME to minimum.
2. Press both VOL. DOWN button on the set and Channel button **(6)** on the remote control for more than 1 second.
3. After the confirmation of using hours, turn off the power.

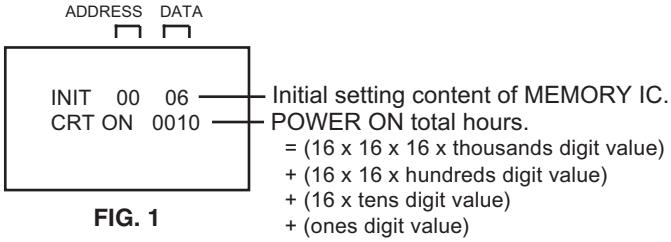

FIG. 1

WHEN REPLACING EEPROM (MEMORY) IC

If a service repair is undertaken where it has been required to change the MEMORY IC, the following steps should be taken to ensure correct data settings while making reference to TABLE 1.

NOTE: No need setting for after INI 1F due to the adjustment value.

INI	+0	+1	+2	+3	+4	+5	+6	+7	+8	+9	+A	+B	+C	+D	+E	+F
00	06	3F	4C	00	D1	05	30	25	15	53	01	00	55	40	0F	77
10	30	50	50	AA	49	78	03	50	50	78	55	BA	00	00	00	00

Table 1

1. Enter DATA SET mode by setting VOLUME to minimum.
2. Press both VOL. DOWN button on the set and Channel button **(6)** on the remote control for more than 1 second. ADDRESS and DATA should appear as FIG 1.
3. ADDRESS is now selected and should "blink". Using the VOL. UP/DOWN button on the remote, step through the ADDRESS until required ADDRESS to be changed is reached.
4. Press ENTER to select DATA. When DATA is selected, it will "blink".
5. Again, step through the DATA using VOL. UP/DOWN button until required DATA value has been selected.
6. Pressing ENTER will take you back to ADDRESS for further selection if necessary.
7. Repeat steps 3 to 6 until all data has been checked.
8. When satisfied correct DATA has been entered, turn POWER off (return to STANDBY MODE) to finish DATA input.

The unit will now have the correct DATA for the new MEMORY IC.

SERVICING FIXTURES AND TOOLS

X-JG176 Up-Date Disc

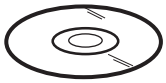

RE-WRITE FOR DVD FIRMWARE

1. Turn on the power, and set the DVD mode.
2. Confirm that the “No Disc” will be appeared on the screen.
3. Open the DVD tray.
4. Press both VOL. DOWN button on the set and Channel button **(5)** on the remote control for more than 1 second.
5. Press OPEN/CLOSE button on the unit to check if all the keys on the unit do not function.
   NOTE: To check if DVD Write mode is set.
   When inserting Up-Date Disc at Non DVD Write mode, the read error will happen.
6. Place the Up-Date Disc and close the tray by hand. **(Refer to SERVICING FIXTURE AND TOOLS)**
7. Automatic read will start and "CD-R UPDATE PROCESS" will be displayed on the screen.
   At this time, the horizontal noise lines may appear. But no problem.
8. Approxi. 20 seconds later, the tray will open automatically. Remove the Up-Date Disc.
9. Then, Approxi. 40 seconds later, the above indication will disappear and the tray will close automatically.
   When the "No Disc" appears on the screen, the write will end.
   NOTE: Do not turn off the unit on the way or push the tray by hand to close it.
   Up-Date error will happen and can not be done with the Up-Date of Up-Date Disc.
10. Unplug the AC cord, then plug it in.
11. **After the write, set to the initializing of shipping.**
    Set to the DVD mode, press both VOL. DOWN button on the set and Channel button **(4)** on the remote control for more than 1 second.
12. The "INITIALIZE 9 ---> COMPLETE" will appear on the screen.
    Then unplug the AC cord, and plug it in.
13. **CHECK FOR THE FIRMWARE VERSION**
    Set to the DVD mode, press both Channel button **(1)** on the remote control and the STOP button on the set for more than 3 seconds.
    Firmware version will be displayed on the top left of the screen.
    When the changed version displays, the Re-write will be completed.
14. Turn off the power.

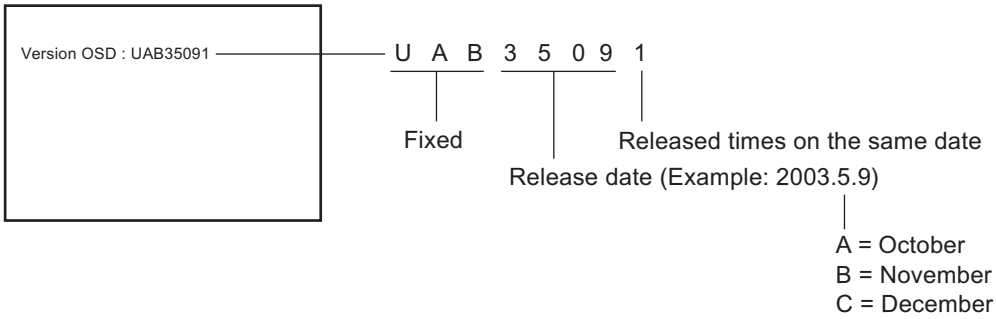

DISC REMOVAL METHOD AT NO POWER SUPPLY

1. Remove the Back Cabinet and AV PCB/DVD Block.
   (Refer to item 1 of the DISASSEMBLY INSTRUCTIONS.)
2. Slide the Rack Loading (White) toward the arrow direction by using a minus driver to release the lock.
   (Refer to Fig. 1)
3. Draw the Tray.

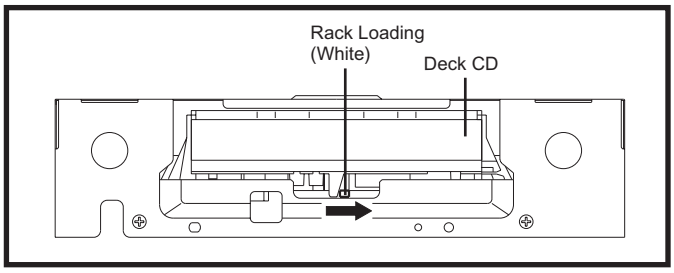

SERVICE ADJUSTMENTS

ELECTRICAL ADJUSTMENTS

1. BEFORE MAKING ELECTRICAL ADJUSTMENTS

Read and perform these adjustments when repairing the circuits or replacing electrical parts or PCB assemblies.

CAUTION

- Use an isolation transformer when performing any service on this chassis.
- Before removing the anode cap, discharge electricity because it contains high voltage.
- When removing a PCB or related component, after unfastening or changing a wire, be sure to put the wire back in its original position.
- When you exchange IC and Transistor for a heat sink, apply the silicon grease **(YG6260M)** on the contact section of the heat sink. Before applying new silicon grease, remove all the old silicon grease. (Old grease may cause damages to the IC and Transistor).

Prepare the following measurement tools for electrical adjustments.

1. Oscilloscope
2. Digital Voltmeter
3. AC Voltmeter
4. Pattern Generator
5. Multi-Sound Signal Generator

On-Screen Display Adjustment

1. Set the VOLUME to minimum.
2. Press the VOL. DOWN button on the set and the Channel button **(9)** on the remote control for more than 1 second to appear the adjustment mode on the screen as shown in **Fig. 1-1**.

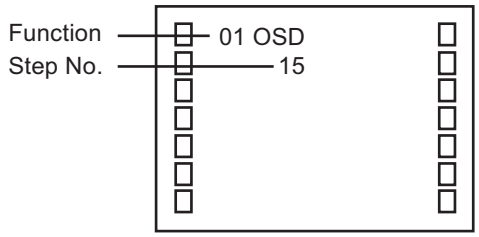

Fig. 1-1

3. Use the Channel UP/DOWN button or Channel button **(1-0)** on the remote control to select the options shown in **Fig. 1-2**.
4. Press the MENU button on the remote control to end the adjustments.

NO.	FUNCTION	NO.	FUNCTION
01	OSD H	35	CONT. AV(MIN)
02	OSD CONTRAST	36	COL. AV(CENT.)
03	CUT OFF	37	COL. AV(MAX)
04	H POSITION	38	COL. AV(MIN)
05	H BLK L	39	TINT AV
06	H BLK R	40	SHARPNESS AV
07	V SIZE	41	SUB BIAS
08	V POSITION	42	BRI. DVD(CENT.)
09	V LINEARITY	43	BRI. DVD(MAX)
10	V S CORRECTION	44	BRI. DVD(MIN)
11	V COMP	45	CONT. DVD(CENT.)
12	R CUT OFF	46	CONT. DVD(MAX)
13	G CUT OFF	47	CONT. DVD(MIN)
14	B CUT OFF	48	COL. DVD(CENT.)
15	R DRIVE	49	COL. DVD(MAX)
16	G DRIVE	50	COL. DVD(MIN)
17	B DRIVE	51	TINT DVD
18	BRIGHTNESS(CENT.)	52	SHARPNESS DVD
19	BRIGHTNESS(MAX)	53	SUB BIAS
20	BRIGHTNESS(MIN)	54	BRI. GAME(CENT.)
21	CONTRAST(CENT.)	55	BRI. GAME(MAX)
22	CONTRAST(MAX)	56	BRI. GAME(MIN)
23	CONTRAST(MIN)	57	CONT. GAME(CENT.)
24	COLOR(CENT.)	58	CONT. GAME(MAX)
25	COLOR(MAX)	59	CONT. GAME(MIN)
26	COLOR(MIN)	60	SUB BIAS
27	TINT	61	TUNING V MUTE
28	SHARPNESS	62	POWER ON V MUTE
29	SUB BIAS	63	INPUT LEVEL
30	BRI. AV(CENT.)	64	SEPARATION L
31	BRI. AV(MAX)	65	SEPARATION H
32	BRI. AV(MIN)	66	X-RAY TEST
33	CONT. AV(CENT.)	67	H STOP
34	CONT. AV(MAX)	68	H FREQ

Fig. 1-2

2. BASIC ADJUSTMENTS

2-1: CONSTANT VOLTAGE

1. Set condition is AV MODE without signal.
2. Using the remote control, set the brightness and contrast to normal position.
3. Connect the digital voltmeter to **TP401**.
4. Adjust the **VR3800** until the digital voltmeter is 114 ± 0.5V.

2-2: FOCUS

1. Receive the monoscope pattern.
2. Turn the Focus Volume fully counterclockwise once.
3. Adjust the **Focus Volume** until picture is distinct.

2-3: CUT OFF

1. Adjust the unit to the following settings.
   R DRIVE=3F, G DRIVE=07, B DRIVE=3F, R CUT OFF=7F, G CUT OFF=7F, B CUT OFF=7F
2. Place the set with Aging Test for more than 15 minutes.
3. Set condition is AV MODE without signal.
4. Using the remote control, set the brightness and contrast to normal position.
5. Activate the adjustment mode display of **Fig. 1-1** and press the channel button **(03)** on the remote control to select "CUT OFF".
6. Adjust the **Screen Volume** until a dim raster is obtained.

2-4: WHITE BALANCE

NOTE: Adjust after performing CUT OFF adjustment.

1. Place the set with Aging Test for more than 15 minutes.
2. Receive the gray scale pattern from the Pattern Generator.
3. Using the remote control, set the brightness and contrast to normal position.
4. Activate the adjustment mode display of **Fig. 1-1** and press the channel button **(16)** on the remote control to select "G DRV".
5. Press the CH. UP/DOWN button on the remote control to select the "R CUT", "G CUT", "B CUT", "R DRV" or "B DRV".
6. Adjust the VOL. UP/DOWN button on the remote control to whiten the R CUT, G CUT, B CUT, R DRV, and B DRV at each step tone sections equally.
7. Perform the above adjustments 5 and 6 until the white color is looked like a white.

2-5: HORIZONTAL POSITION

1. Receive the monoscope pattern.
2. Using the remote control, set the brightness and contrast to normal position.
3. Activate the adjustment mode display of **Fig. 1-1** and press the channel button **(04)** on the remote control to select "HPOSI".
4. Press the VOL. UP/DOWN button on the remote control until the SHIFT quantity of the OVER SCAN on right and left becomes minimum.

2-6: VERTICAL POSITION

1. Receive the monoscope pattern.
2. Using the remote control, set the brightness and contrast to normal position.
3. Activate the adjustment mode display of **Fig. 1-1** and press the channel button **(08)** on the remote control to select "VPOSI".
4. Check if the step No. V POSI is "01".
5. Adjust the **VR402** until the horizontal line becomes fit to notch of the shadow mask.

2-7: VERTICAL SIZE

1. Receive the monoscope pattern.
2. Using the remote control, set the brightness and contrast to normal position.
3. Activate the adjustment mode display of **Fig. 1-1** and press the channel button **(07)** on the remote control to select "VSIZE".
4. Press the VOL. UP/DOWN button on the remote control until the Up/Down OVER SCAN Quantity becomes equal to the Right/Left OVER SCAN Quantity.
5. Receive a broadcast and check if the picture is normal.

2-8: VERTICAL LINEARITY

NOTE: Adjust after performing adjustments in section 2-7.
After the adjustment of Vertical Linearity, reconfirm the Vertical Position and Vertical Size adjustments.

1. Receive the monoscope pattern.
2. Using the remote control, set the brightness and contrast to normal position.
3. Activate the adjustment mode display of **Fig. 1-1** and press the channel button **(09)** on the remote control to select "VLIN".
4. Press the VOL. UP/DOWN button on the remote control until the SHIFT quantity of the OVER SCAN on upside and downside becomes minimum.

2-9: LEVEL

1. Receive the VHF HIGH (70dB).
2. Connect the AC voltmeter to **pin 6 of CP101**.
3. Activate the adjustment mode display of **Fig. 1-1** and press the channel button **(63)** on the remote control to select "LVL".
4. Press the VOL. UP/DOWN button on the remote control until the AC voltmeter is 75 ± 2mV.

2-10: SEPARATION

Please do the method (1) or method (2) adjustment.

Method (1)

1. Set the multi-sound signal generator for each different Lch and R-ch frequency (Ex. L-ch=2KHz, R-ch=400Hz) and receive the RF signal.
2. Connect the oscilloscope to the **Audio Out Jack**.
3. Press the AUDIO button on the remote control to set to the stereo mode.
4. Activate the adjustment mode display of **Fig. 1-1** and press the channel button **(64)** on the remote control to select “SEPAL”.
5. Press the VOL. UP/DOWN button on the remote control to adjust it until the audio output wave becomes a fine sine wave.
6. Press the CH UP button 1 time to set to "SEPAH" mode.
7. Press the VOL. UP/DOWN button on the remote control to adjust it until the audio output wave becomes a fine sine wave.

Method (2)

1. Set the multi-sound signal generator L-ch=1KHz, R-ch=Non input and receive the RF signal.
2. Connect the oscilloscope to the **Audio Out Jack (R-ch)**.
3. Press the AUDIO button on the remote control to set to the stereo mode.
4. Activate the adjustment mode display of **Fig. 1-1** and press the channel button **(64)** on the remote control to select “SEPAL”.
5. Press the VOL. UP/DOWN button on the remote control to adjust it until the R-ch output becomes minimum.
6. Press the CH UP button 1 time to set to "SEPAH" mode.
7. Press the VOL. UP/DOWN button on the remote control to adjust it until the R-ch output becomes minimum.
8. Set the multi-sound signal generator L-ch=Non input, R-ch=1KHz and receive the RF signal.
9. Connect the oscilloscope to the **Audio Out Jack (L-ch)**.
   Then perform the above adjustments 3~7.

2-11: OSD HORIZONTAL

1. Activate the adjustment mode display of **Fig. 1-1**.
2. Press the VOL. UP/DOWN button on the remote control until the difference of A and B becomes minimum.
   (Refer to Fig. 2-1)

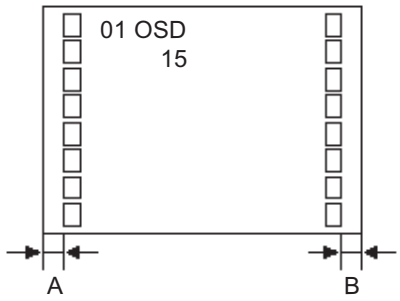

Fig. 2-1

2-12: BRIGHT CENTER

1. Receive the monoscope pattern. (RF Input)
2. Using the remote control, set the brightness and contrast to normal position.
3. Activate the adjustment mode display of **Fig. 1-1** and press the channel button **(18)** on the remote control to select "BRTC".
4. Press the VOL. UP/DOWN button on the remote control until the white 15% is starting to be visible
5. Receive the monoscope pattern. (Audio Video Input)
6. Press the INPUT button on the remote control to set to the AV mode.
7. Using the remote control, set the brightness and contrast to normal position.
8. Activate the adjustment mode display of **Fig. 1-1** and press the channel button **(30)** on the remote control to select "BRTCA".
9. Press the VOL. UP/DOWN button on the remote control until the white 15% is starting to be visible
10. Press the TV/DVD button on the remote control to set to the DVD mode.
11. Activate the adjustment mode display of **Fig. 1-1** and press the channel button **(42)** on the remote control to select "BRTCD".
12. Press the VOL. UP/DOWN button on the remote control to set the same step numbers as the AV.
13. Press the INPUT button on the remote control to set to the GAME mode.
14. Activate the adjustment mode display of **Fig. 1-1** and press the channel button **(54)** on the remote control to select "BRTCG".
15. Press the VOL. UP/DOWN button on the remote control to set the same step numbers as the AV.

2-13: TINT CENTER

1. Receive the color bar pattern. (RF Input)
2. Using the remote control, set the brightness, contrast, color and tint to normal position.
3. Connect the oscilloscope to **TP022**.
4. Activate the adjustment mode display of **Fig. 1-1** and press the channel button **(27)** on the remote control to select "TNTC".
5. Press the VOL. UP/DOWN button on the remote control until the section "A" becomes a straight line.
   (Refer to Fig. 2-2)
6. Receive the color bar pattern. (Audio Video Input)
7. Press the INPUT button on the remote control to set to the AV mode.
8. Using the remote control, set the brightness, contrast, color and tint to normal position.
9. Activate the adjustment mode display of **Fig. 1-1** and press the channel button **(39)** on the remote control to select "TNTCA".
10. Press the VOL. UP/DOWN button on the remote control until the section "A" becomes a straight line.
    (Refer to Fig. 2-2)
11. Press the TV/DVD button on the remote control to set to the DVD mode.
12. Activate the adjustment mode display of **Fig. 1-1** and press the channel button **(51)** on the remote control to select "TNTCD".
13. Press the VOL. UP/DOWN button on the remote control to set the same step numbers as the AV.

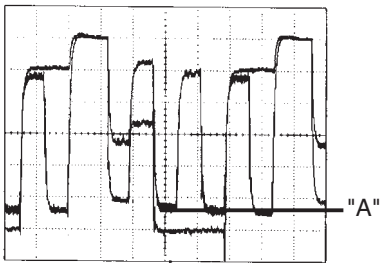

Fig. 2-2

2-14: COLOR CENTER

1. Receive the color bar pattern. (RF Input)
2. Using the remote control, set the brightness, contrast, color and tint to normal position.
3. Connect the oscilloscope to **TP024**.
4. Activate the adjustment mode display of **Fig. 1-1** and press the channel button **(24)** on the remote control to select "COLC".
5. Adjust the VOLTS RANGE VARIABLE knob of the oscilloscope until the range between white 100% and 0% is set to 4 scales on the screen of the oscilloscope.
6. Press the VOL. UP/DOWN button on the remote control until the red color level is adjusted to 100 ± 5% of the white level. **(Refer to Fig. 2-3)**
7. Receive the color bar pattern. (Audio Video Input)
8. Press the INPUT button on the remote control to set to the AV mode.
9. Using the remote control, set the brightness, contrast, color and tint to normal position.
10. Activate the adjustment mode display of **Fig. 1-1** and press the channel button **(36)** on the remote control to select "COLCA".
11. Adjust the VOLTS RANGE VARIABLE knob of the oscilloscope until the range between white 100% and 0% is set to 4 scales on the screen of the oscilloscope.
12. Press the VOL. UP/DOWN button on the remote control until the red color level is adjusted to 100 ± 5% of the white level. **(Refer to Fig. 2-3)**
13. Press the TV/DVD button on the remote control to set to the DVD mode.
14. Activate the adjustment mode display of **Fig. 1-1** and press the channel button **(48)** on the remote control to select "COLCD".
15. Press the VOL. UP/DOWN button on the remote control to set the same step numbers as the AV.

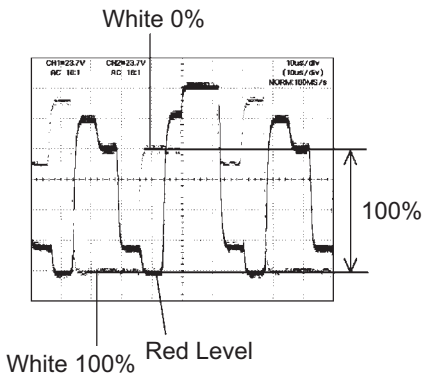

Fig. 2-3

2-15: CONTRAST MAX

1. Activate the adjustment mode display of **Fig. 1-1** and press the channel button **(22)** on the remote control to select "CNTX".
2. Press the VOL. UP/DOWN button on the remote control until the contrast step No. becomes "49"
3. Receive a broadcast and check if the picture is normal.
4. Press the INPUT button on the remote control to set to the AV mode.
5. Activate the adjustment mode display of **Fig. 1-1** and press the channel button **(34)** on the remote control to select "CNTXA".
6. Press the VOL. UP/DOWN button on the remote control until the contrast step No. becomes "4F"
7. Receive a broadcast and check if the picture is normal.
8. Press the TV/DVD button on the remote control to set to the DVD mode.
9. Activate the adjustment mode display of **Fig. 1-1** and press the channel button **(46)** on the remote control to select "CNTXD".
10. Press the VOL. UP/DOWN button on the remote control to set the same step numbers as the AV.
11. Press the INPUT button on the remote control to set to the GAME mode.
12. Activate the adjustment mode display of **Fig. 1-1** and press the channel button **(58)** on the remote control to select "CNTXG".
13. Press the VOL. UP/DOWN button on the remote control to set the same step numbers as the AV.

2-16: Confirmation of Fixed Value (Step No.)

Please check if the fixed values of the each adjustment items are set correctly referring below.

NO.	FUNCTION	STEP NO.	NO.	FUNCTION	STEP NO.
02	OSD CONTRAST	02	38	COL. AV(MIN)	07
05	H BLK L	00	40	SHARPNESS AV	0E
06	H BLK R	00	41	SUB BIAS	50
08	V POSITION	01	43	BRI. DVD(MAX)	4A
10	V S CORRECTION	07	44	BRI. DVD(MIN)	10
11	V COMP	03	45	CONT. DVD(CENT.)	3A
16	G DRIVE	0A	47	CONT. DVD(MIN)	05
19	BRIGHTNESS(MAX)	4A	49	COL. DVD(MAX)	7F
20	BRIGHTNESS(MIN)	10	50	COL. DVD(MIN)	07
21	CONTRAST(CENT.)	3A	52	SHARPNESS DVD	0E
23	CONTRAST(MIN)	05	53	SUB BIAS	50
25	COLOR(MAX)	7F	55	BRI. GAME(MAX)	4A
26	COLOR(MIN)	07	56	BRI. GAME(MIN)	10
28	SHARPNESS	0E	57	CONT. GAME(CENT.)	3A
29	SUB BIAS	50	59	CONT. GAME(MIN)	05
31	BRI. AV(MAX)	4A	60	SUB BIAS	50
32	BRI. AV(MIN)	10	61	TUNING V MUTE	00
33	CONT. AV(CENT.)	3A	62	POWER ON V MUTE	40
35	CONT. AV(MIN)	05	68	H FREQ	3F
37	COL. AV(MAX)	7F			

3. PURITY AND CONVERGENCE ADJUSTMENTS

NOTE

1. Turn the unit on and let it warm up for at least 30 minutes before performing the following adjustments.
2. Place the CRT surface facing east or west to reduce the terrestrial magnetism.
3. Turn ON the unit and demagnetize with a Degauss Coil.

3-1: STATIC CONVERGENCE (ROUGH ADJUSTMENT)

1. Tighten the screw for the magnet. Refer to the adjusted CRT for the position. **(Refer to Fig. 3-1)**
   If the deflection yoke and magnet are in one body, untighten the screw for the body.
2. Receive the green raster pattern from the color bar generator.
3. Slide the deflection yoke until it touches the funnel side of the CRT.
4. Adjust center of screen to green, with red and blue on the sides, using the pair of purity magnets.
5. Switch the color bar generator from the green raster pattern to the crosshatch pattern.
6. Combine red and blue of the 3 color crosshatch pattern on the center of the screen by adjusting the pair of 4 pole magnets.
7. Combine red/blue (magenta) and green by adjusting the pair of 6 pole magnets.
8. Adjust the crosshatch pattern to change to white by repeating steps 6 and 7.

3-2: PURITY

NOTE

Adjust after performing adjustments in section 3-1.

1. Receive the green raster pattern from color bar generator.
2. Adjust the pair of purity magnets to center the color on the screen.
   Adjust the pair of purity magnets so the color at the ends are equally wide.
3. Move the deflection yoke backward (to neck side) slowly, and stop it at the position when the whole screen is green.
4. Confirm red and blue colors.
5. Adjust the slant of the deflection yoke while watching the screen, then tighten the fixing screw.

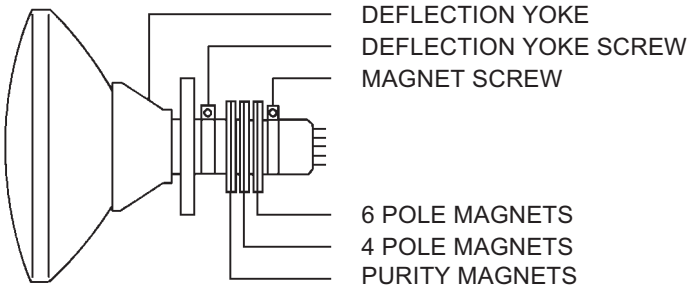

Fig. 3-1

3-3: STATIC CONVERGENCE

NOTE

Adjust after performing adjustments in section 3-2.

1. Receive the crosshatch pattern from the color bar generator.
2. Combine red and blue of the 3 color crosshatch pattern on the center of the screen by adjusting the pair of 4 pole magnets.
3. Combine red/blue (magenta) and green by adjusting the pair of 6 pole magnets.

3-4: DYNAMIC CONVERGENCE

NOTE

Adjust after performing adjustments in section 3-3.

1. Adjust the differences around the screen by moving the deflection yoke upward/downward and right/left.
   (Refer to Fig. 3-2-a)
2. Insert three wedges between the deflection yoke and CRT funnel to fix the deflection yoke.
   (Refer to Fig. 3-2-b)

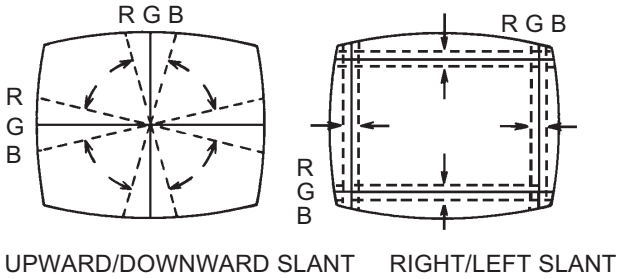

Fig. 3-2-a

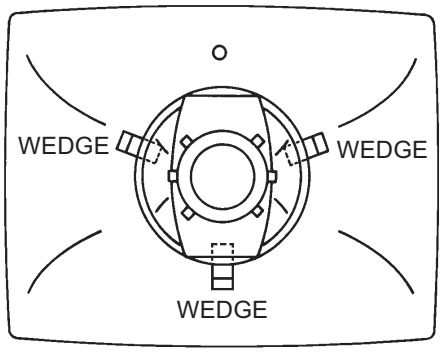

Fig. 3-2-b

4. ELECTRICAL ADJUSTMENT PARTS LOCATION GUIDE (WIRING CONNECTION)

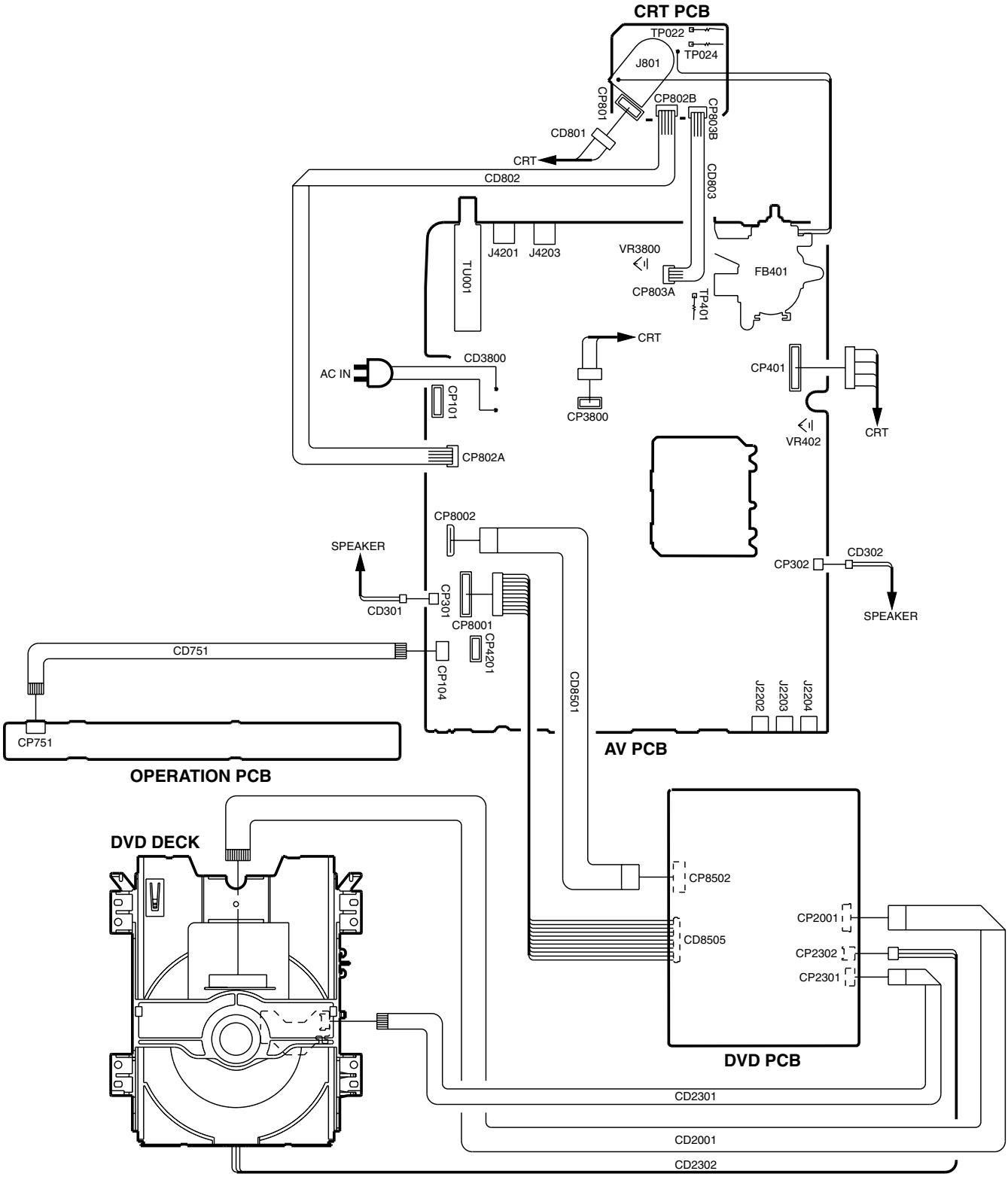

GUIDE FOR REPAIRING

IC DESCRIPTION

AV PCB OEC6073A (IC101)

No.	Symbol	I/O	Logic	Function
1	VSS	-	-	Negative power supply (Ground)
2	TV/DVD	Output	1	TV/DVD picture signal changing output
3	PROTECT	Output	1	Output terminal for protect from high-voltage remaining
4	TV MUTE	Output	1	Volume muting output
5	DVD POWER	Output	1	DVD power control output
6	DVD RESET	Output	0	Enforced reset output for DVD
7	TV POWER	Output	1	Power control output
8	DEGAUSS	Output	1	Degauss output
9	UART CLOCK	Output	1	The asynchronous clock output
10	UART START BIT	Input	1	The entry for the asynchronous Start bit detection
11	RX	Input	-	The communication DATA entry from the side of DVD
12	TX	Output	-	The communication DATA output to the side of DVD
13	UART CLOCK IN	Input	-	The asynchronous clock Input
14	H CONTROL	Output	1	Output terminal for Horizontality Control
15	X-RAY IN	Input	-	X-RAY detection input (nom. 0V)
16	AFT	Input	1	Voltage of tuning input
17	KEY1	Input	0	Voltage of the TV button input
18	KEY2	Input	0	Voltage of the TV button input
19	AV2	Output	1	TV/DVD picture signal changing output
20	AV1	Output	1	TV/DVD picture signal changing output
21	IIC BUS OFF	Input	0	Serial clock/data stop input
22	OSD R	Output	1	Red output of RGB image output
23	OSD G	Output	1	Green output of RGB image output
24	OSD B	Output	1	Blue output of RGB image output
25	OSD Y/BLK	Output	1	Fast blanking control signal
26	Hsync	Input	0	Horizontal synchronization input
27	Vsync	Input	0	Vertical synchronization input
28	OVDD	-	-	Positive power supply (+5V nom.)
29	OVCC	-	-	Negative power supply (Ground)
30	TEST	Input	-	Test input (connects with Ground)
31	XIN	Input	-	Connect the main crystal.
32	XOUT	Output	-	Connect the main crystal.
33	RESET	Input	0	System reset voltage input
34	POWER FAIL	Input	0	Power failure detection input
35	REMOCON	Input	0	Remote control input
36	SD	Input	0	Synchronization detector input
37	SCL	Output	-	Serial clock output
38	SDA	In/Output	-	Serial data Input/output
39	VSS	-	-	Negative power supply (Ground)
40	VIDEO IN 1	Input	-	Picture signal input for the Closed Caption (2Vp-p)
41	VIDEO IN 2	Input	-	Picture signal input for the Closed Caption (2Vp-p)
42	VDD	-	-	Positive power supply (+5V nom.)

TROUBLESHOOTING GUIDE

(DVD SECTION)

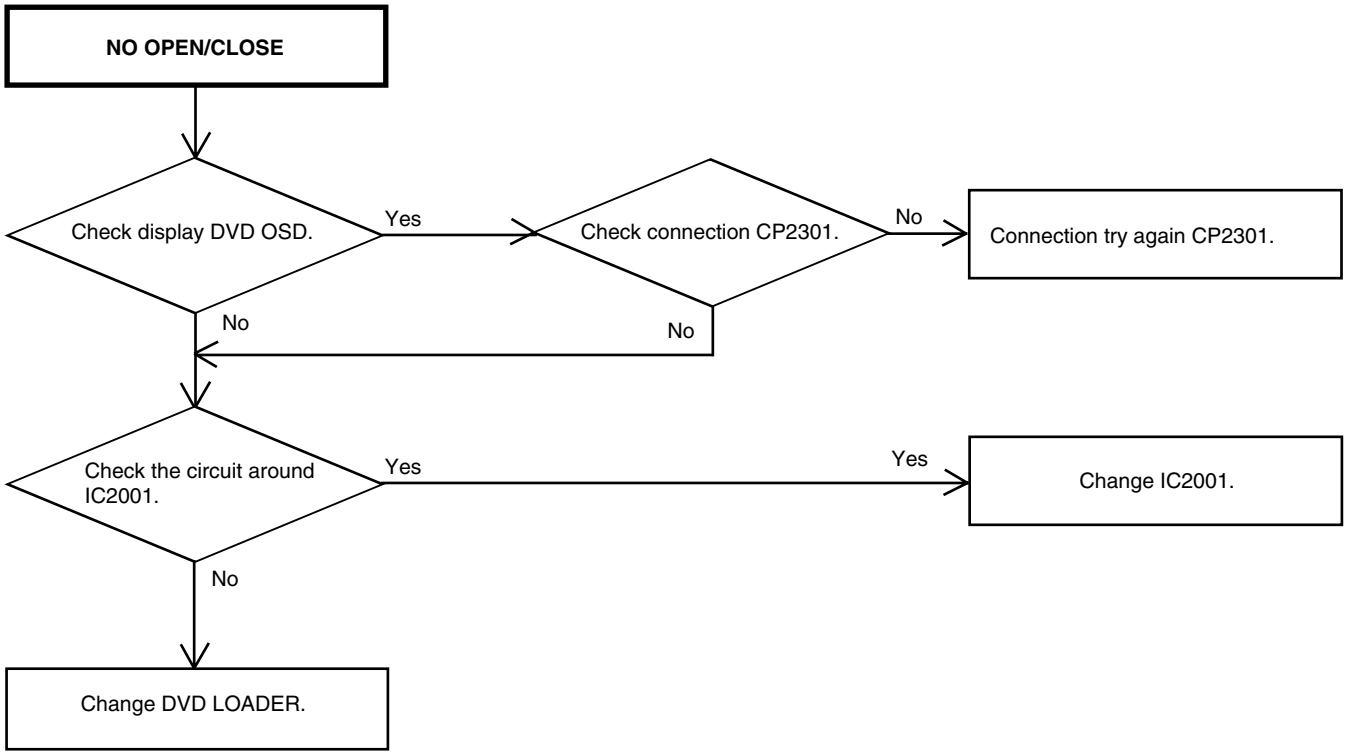

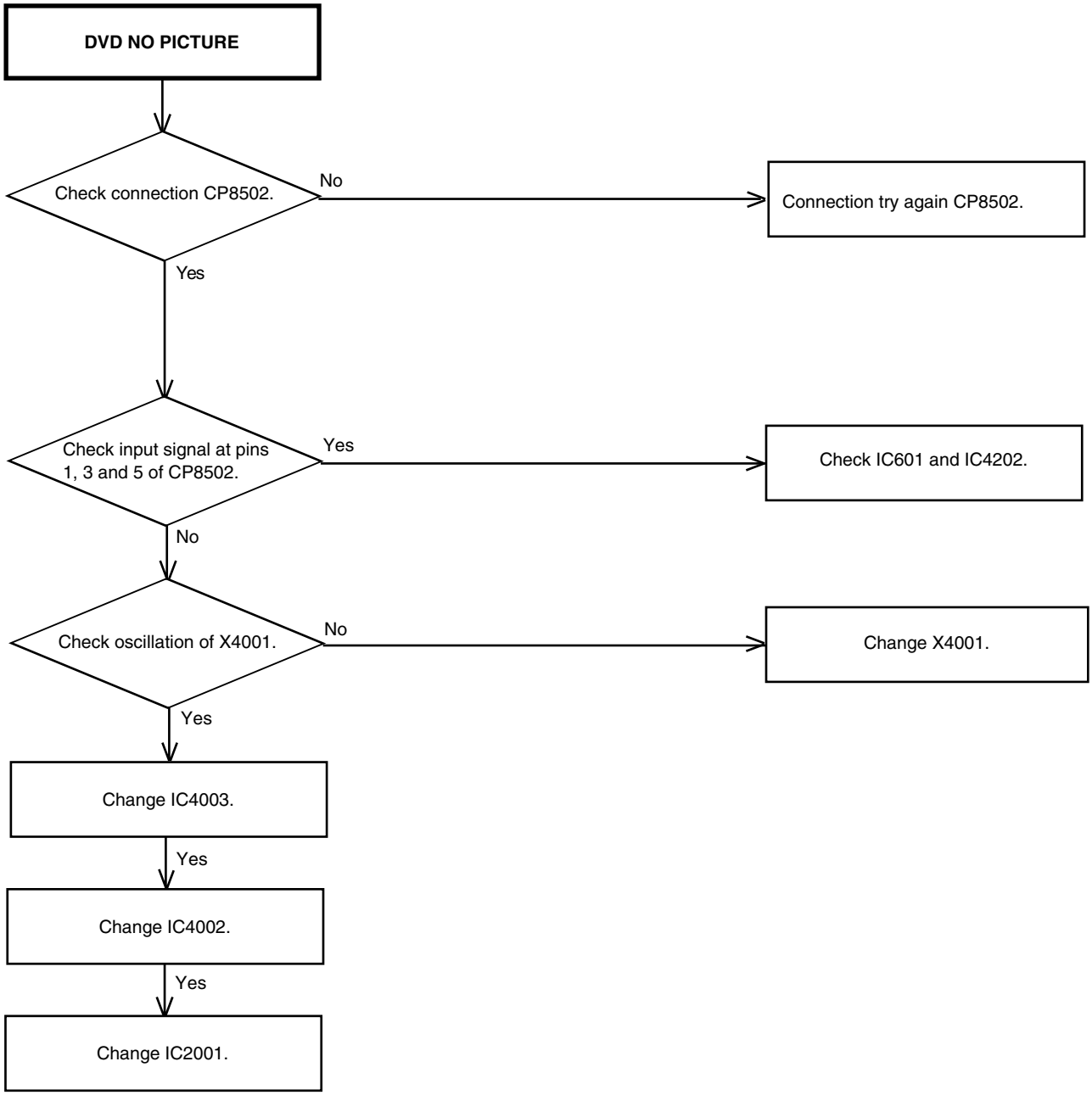
DVD NO PICTURE
Check connection CP8502.
No
Connection try again CP8502.
Yes
Check input signal at pins 1, 3 and 5 of CP8502.
Yes
Check IC601 and IC4202.
No
Check oscillation of X4001.
No
Change X4001.
Yes
Change IC4003.
Yes
Change IC4002.
Yes
Change IC2001.

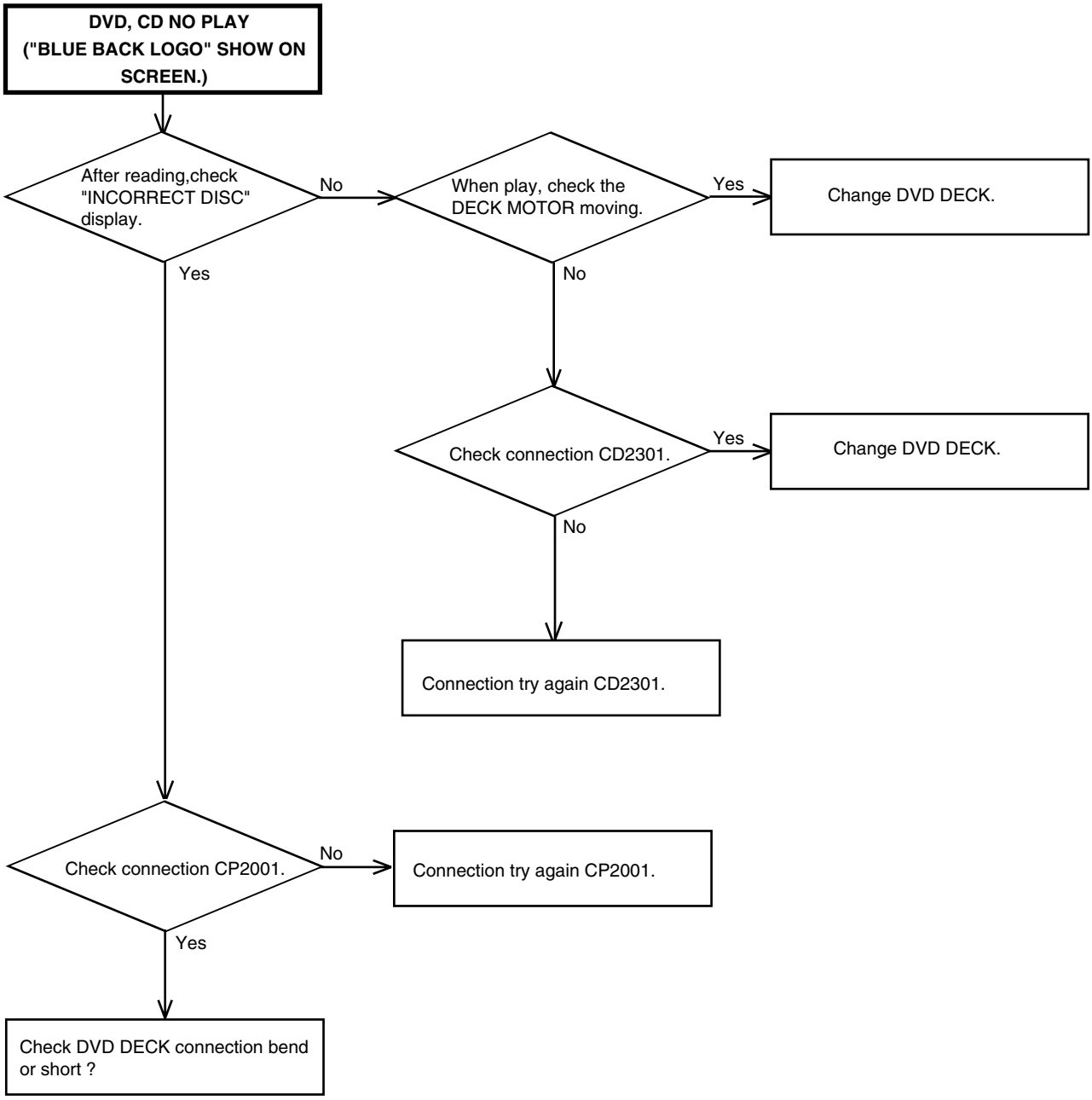
DVD, CD NO PLAY
("BLUE BACK LOGO" SHOW ON SCREEN.)
After reading,check "INCORRECT DISC" display.
No
When play, check the DECK MOTOR moving.
Yes
Change DVD DECK.
Yes
No
Check connection CD2301.
Yes
Change DVD DECK.
No
Connection try again CD2301.
Check connection CP2001.
No
Connection try again CP2001.
Yes
Check DVD DECK connection bend or short ?

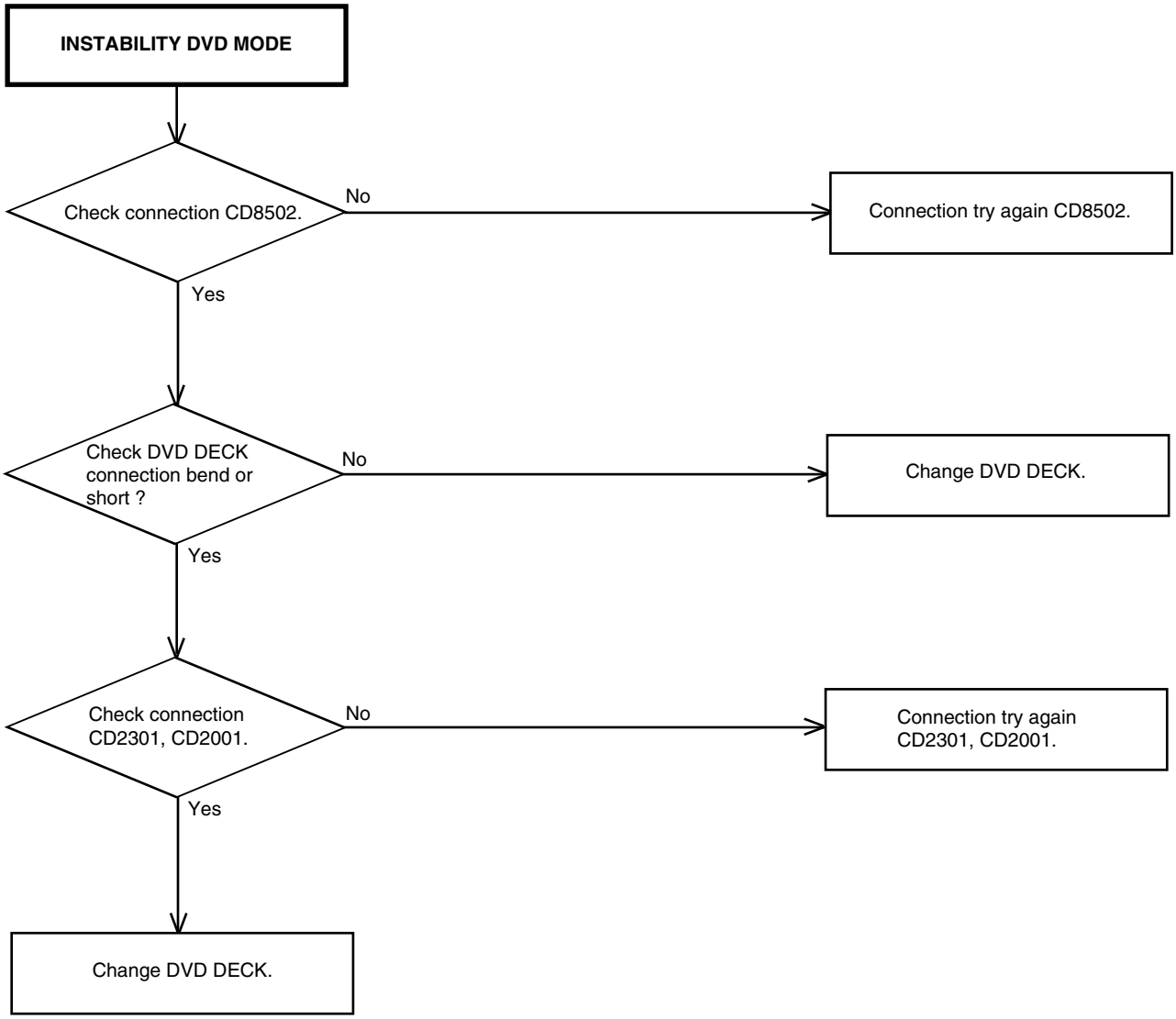
INSTABILITY DVD MODE
Check connection CD8502.
No
Connection try again CD8502.
Yes
Check DVD DECK connection bend or short ?
No
Change DVD DECK.
Yes
Check connection CD2301, CD2001.
No
Connection try again CD2301, CD2001.
Yes
Change DVD DECK.

(TV SECTION)

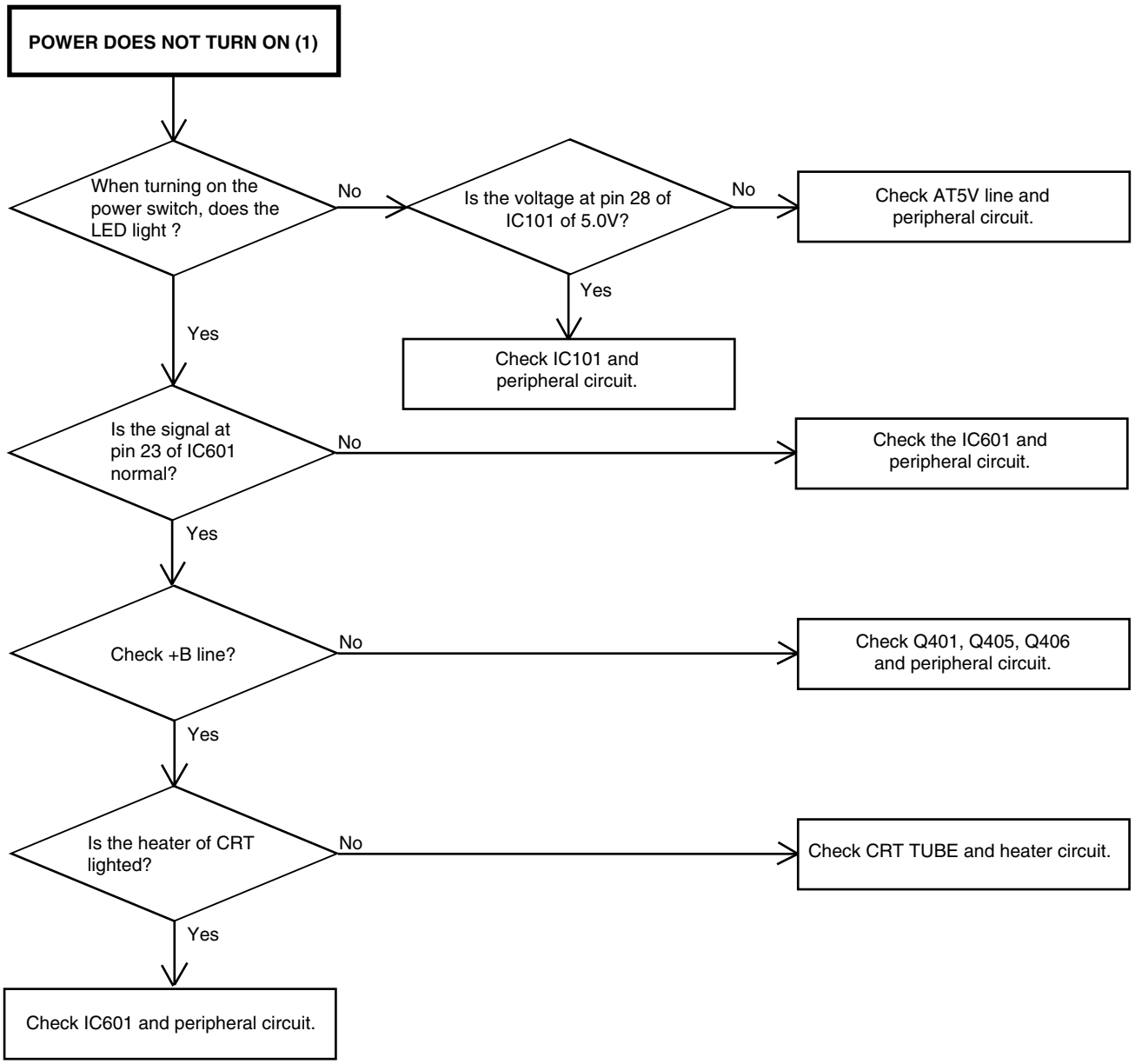
POWER DOES NOT TURN ON (1)
When turning on the power switch, does the LED light ?
No
Is the voltage at pin 28 of IC101 of 5.0V?
No
Check AT5V line and peripheral circuit.
Yes
Check IC101 and peripheral circuit.
Yes
Is the signal at pin 23 of IC601 normal?
No
Check the IC601 and peripheral circuit.
Yes
Check +B line?
No
Check Q401, Q405, Q406 and peripheral circuit.
Yes
Is the heater of CRT lighted?
No
Check CRT TUBE and heater circuit.
Yes
Check IC601 and peripheral circuit.

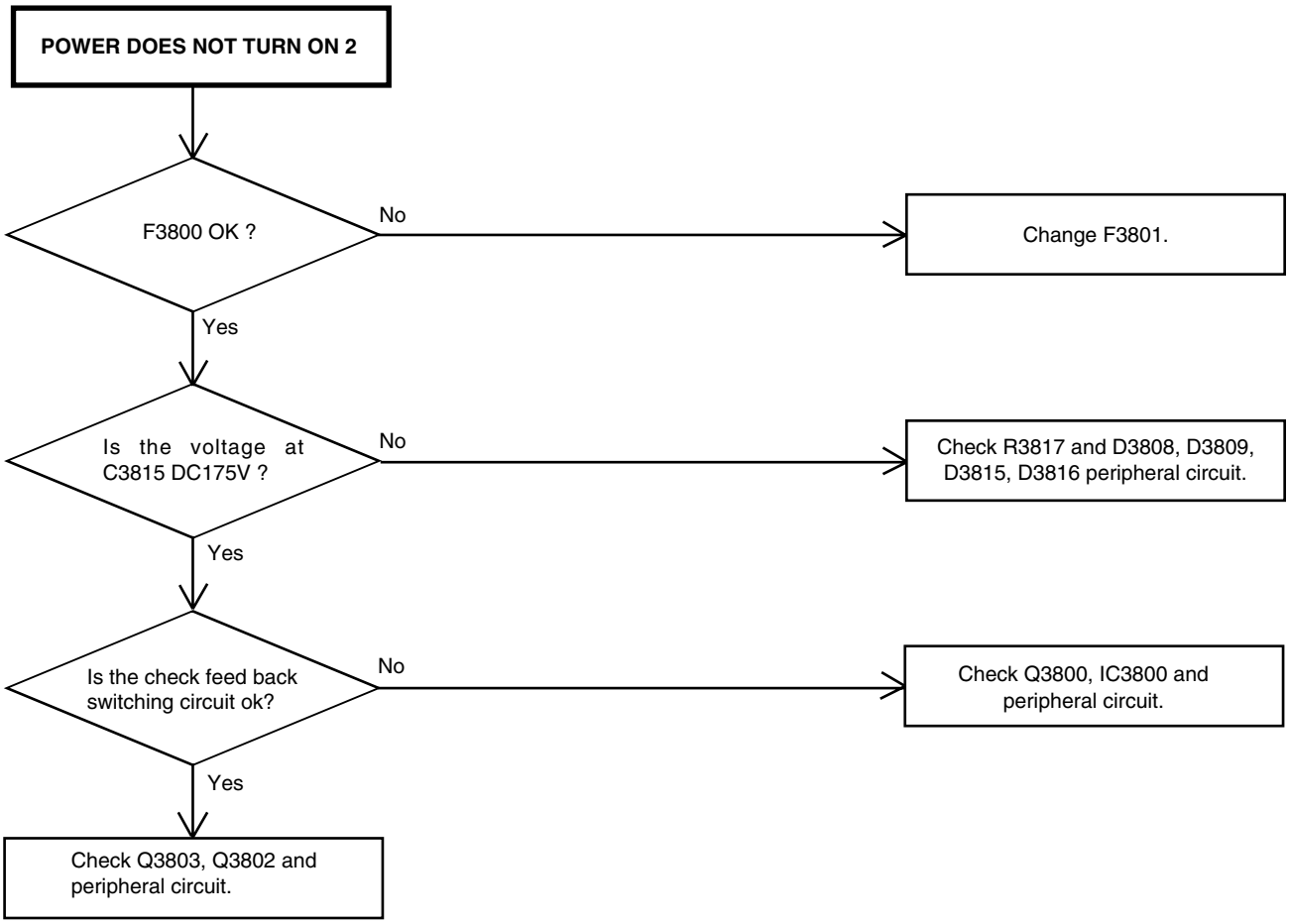
POWER DOES NOT TURN ON 2
F3800 OK ?
No
Change F3801.
Yes
Is the voltage at C3815 DC175V ?
No
Check R3817 and D3808, D3809, D3815, D3816 peripheral circuit.
Yes
Is the check feed back switching circuit ok?
No
Check Q3800, IC3800 and peripheral circuit.
Yes
Check Q3803, Q3802 and peripheral circuit.

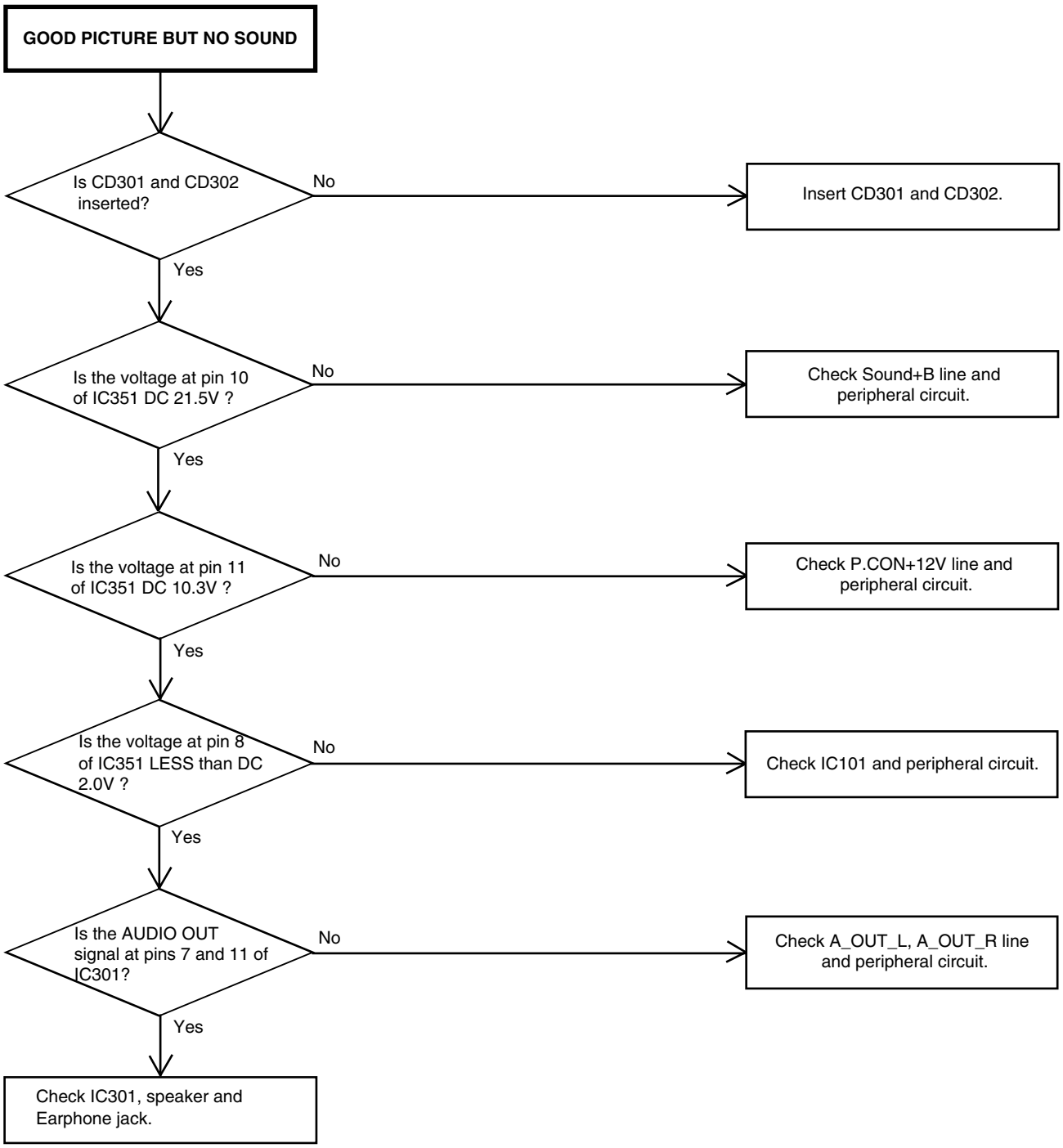
GOOD PICTURE BUT NO SOUND
Is CD301 and CD302 inserted?
No
Insert CD301 and CD302.
Yes
Is the voltage at pin 10 of IC351 DC 21.5V ?
No
Check Sound+B line and peripheral circuit.
Yes
Is the voltage at pin 11 of IC351 DC 10.3V ?
No
Check P.CON+12V line and peripheral circuit.
Yes
Is the voltage at pin 8 of IC351 LESS than DC 2.0V ?
No
Check IC101 and peripheral circuit.
Yes
Is the AUDIO OUT signal at pins 7 and 11 of IC301?
No
Check A_OUT_L, A_OUT_R line and peripheral circuit.
Yes
Check IC301, speaker and Earphone jack.

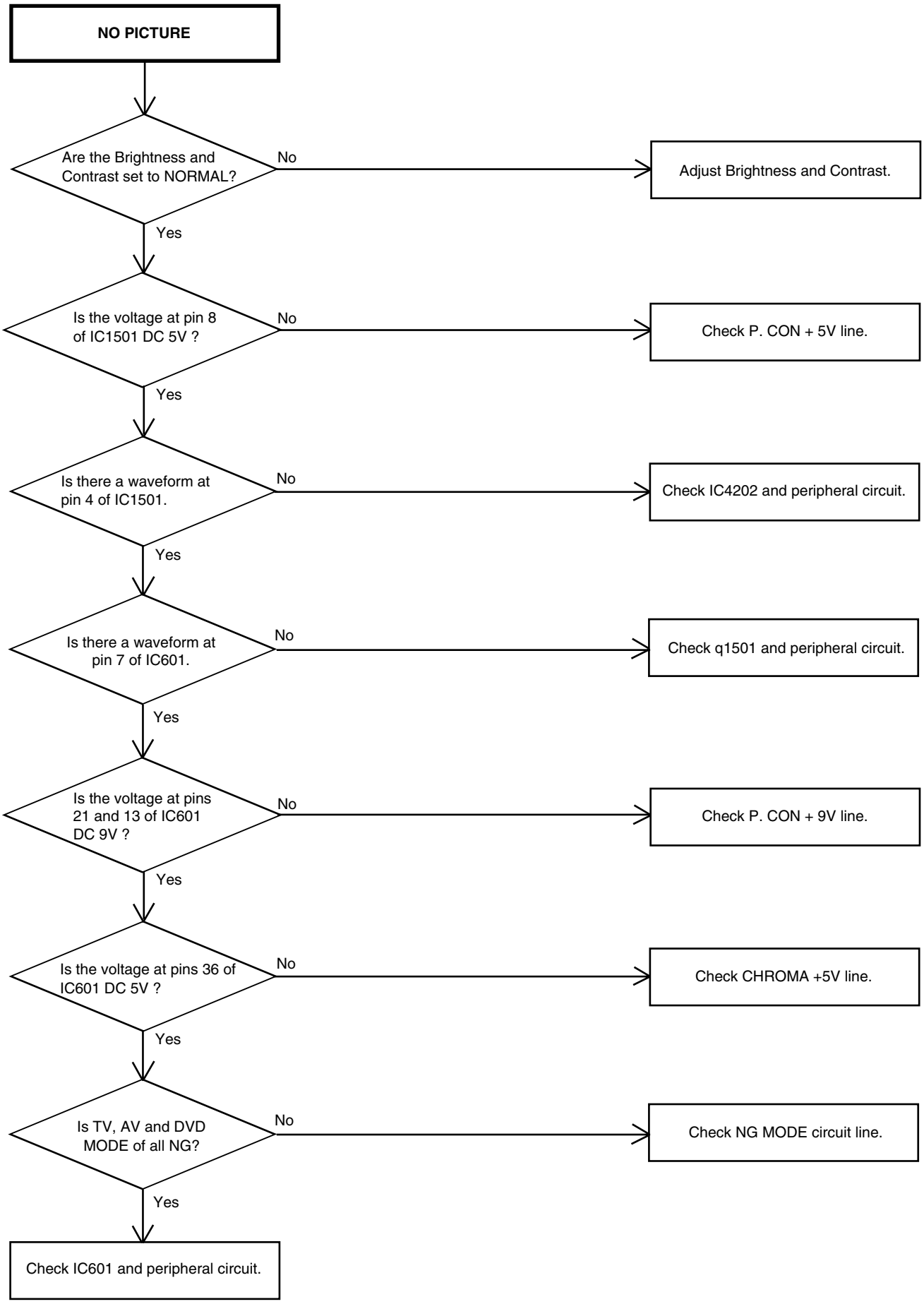
NO PICTURE
Are the Brightness and Contrast set to NORMAL?
No
Adjust Brightness and Contrast.
Yes
Is the voltage at pin 8 of IC1501 DC 5V ?
No
Check P. CON + 5V line.
Yes
Is there a waveform at pin 4 of IC1501.
No
Check IC4202 and peripheral circuit.
Yes
Is there a waveform at pin 7 of IC601.
No
Check q1501 and peripheral circuit.
Yes
Is the voltage at pins 21 and 13 of IC601 DC 9V ?
No
Check P. CON + 9V line.
Yes
Is the voltage at pins 36 of IC601 DC 5V ?
No
Check CHROMA +5V line.
Yes
Is TV, AV and DVD MODE of all NG?
No
Check NG MODE circuit line.
Yes
Check IC601 and peripheral circuit.

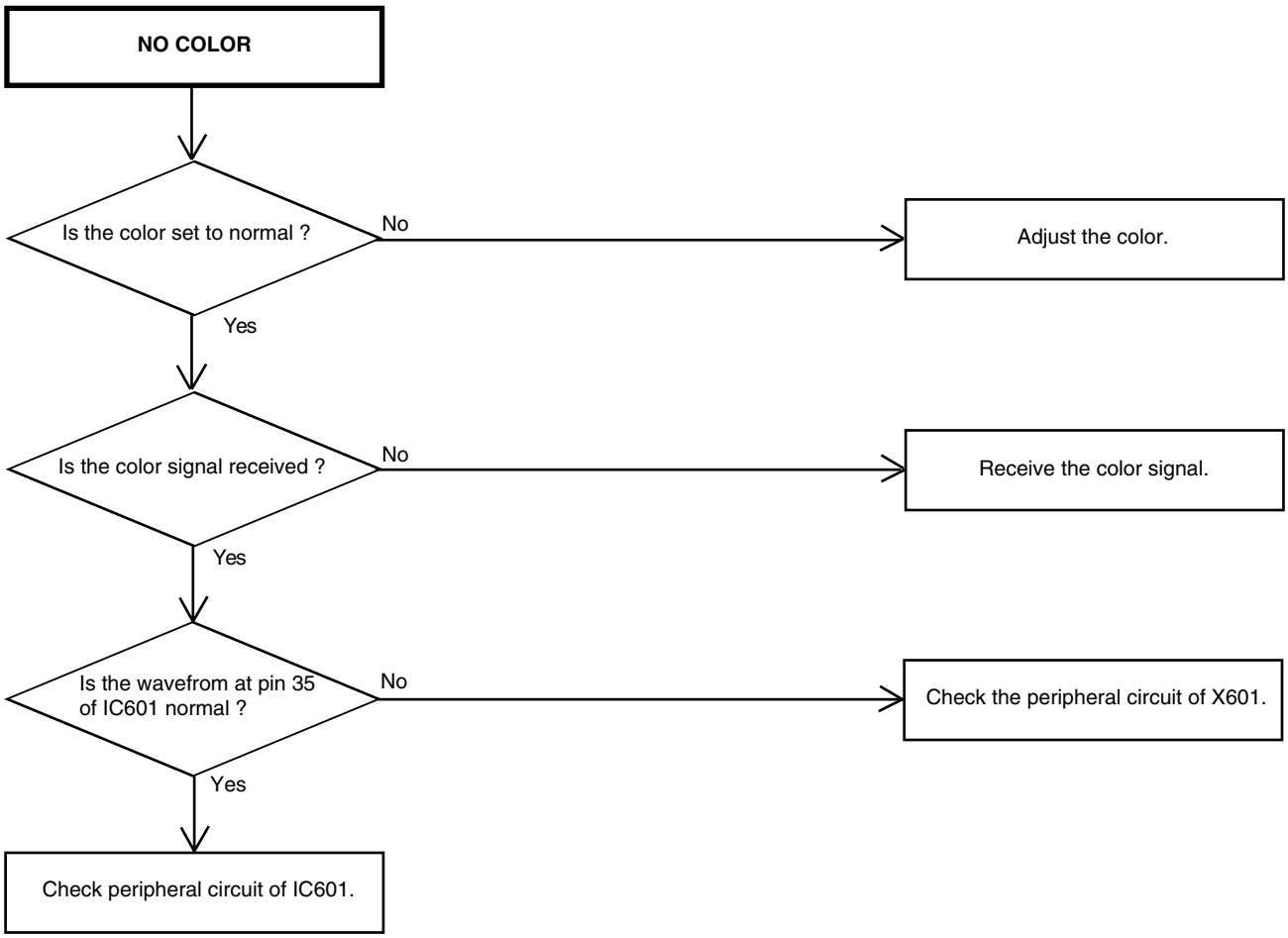
NO COLOR
Is the color set to normal ?
No
Adjust the color.
Yes
Is the color signal received ?
No
Receive the color signal.
Yes
Is the wavefrom at pin 35 of IC601 normal ?
No
Check the peripheral circuit of X601.
Yes
Check peripheral circuit of IC601.

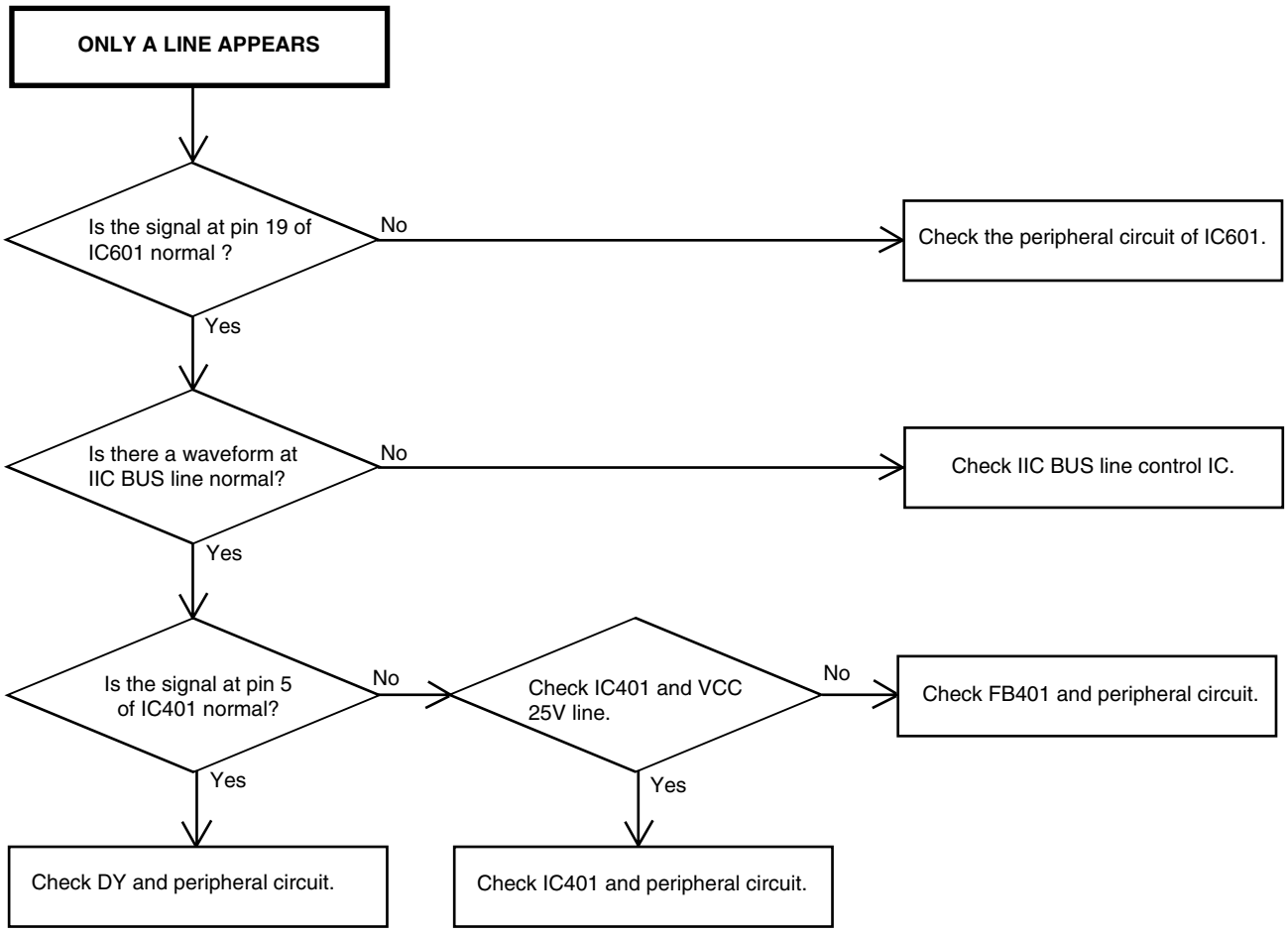
ONLY A LINE APPEARS
Is the signal at pin 19 of IC601 normal ?
No
Check the peripheral circuit of IC601.
Yes
Is there a waveform at IIC BUS line normal?
No
Check IIC BUS line control IC.
Yes
Is the signal at pin 5 of IC401 normal?
No
Check IC401 and VCC 25V line.
No
Check FB401 and peripheral circuit.
Yes
Yes
Check DY and peripheral circuit.
Check IC401 and peripheral circuit.

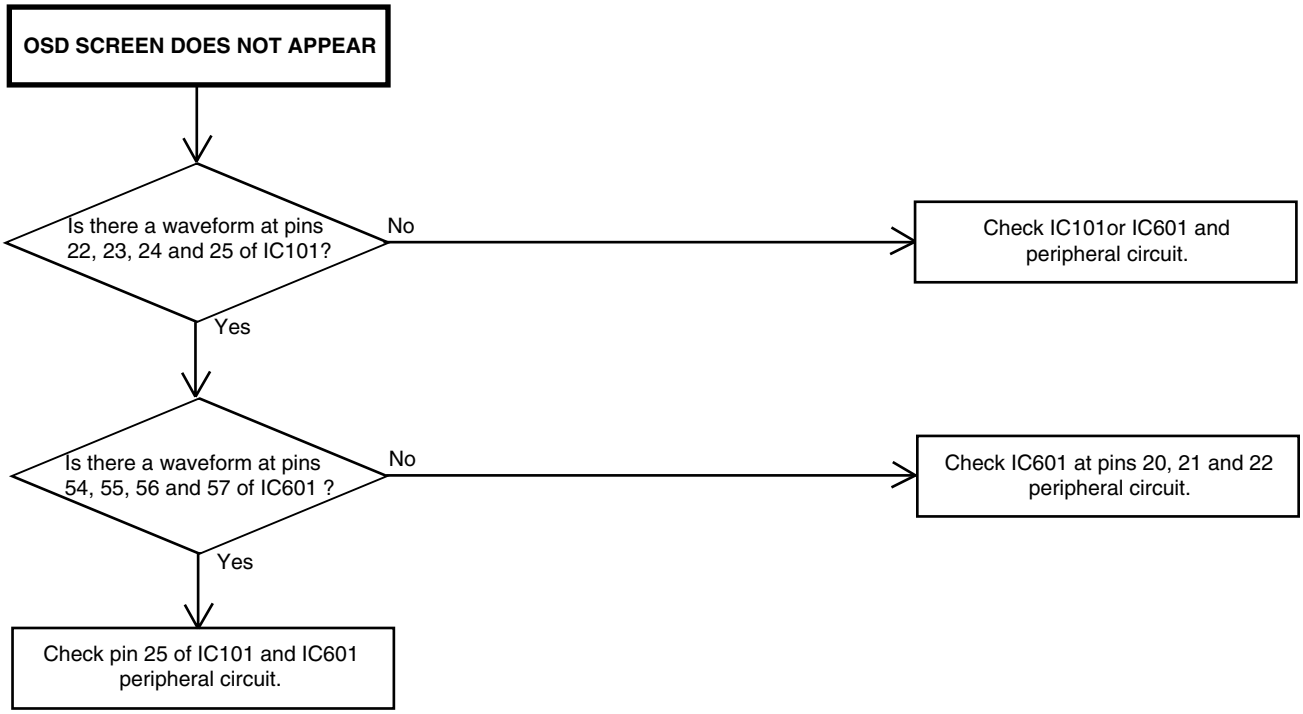
OSD SCREEN DOES NOT APPEAR
Is there a waveform at pins 22, 23, 24 and 25 of IC101?
No
Check IC101or IC601 and peripheral circuit.
Yes
Is there a waveform at pins 54, 55, 56 and 57 of IC601 ?
No
Check IC601 at pins 20, 21 and 22 peripheral circuit.
Yes
Check pin 25 of IC101 and IC601 peripheral circuit.

SERVICE NOTE :

JVC SERVICE & ENGINEERING COMPANY OF AMERICA

DIVISION OF JVC AMERICAS CORP.

www.jvcservice.com(US Only)

JVC CANADA INC.

Head office : 21 Finchdene Square Scarborough, Ontario M1X 1A7 (416)293-1311

JVC®

(No. 52133)

Printed in Japan
200306WPC